DEPARTMENT OF THE ARMY
JACKSONVILLE DISTRICT CORPS OF ENGINEERS
SOUTH PERMITS BRANCH
4400 PGA BOULEVARD, SUITE 500
PALM BEACH GARDENS, FLORIDA 33410

REPLY TO
ATTENTION OF

Regulatory Division
South Permits Branch

PUBLIC NOTICE

Permit Application No. 2004-771(IP – KBH) OCT 28 2004

TO WHOM IT MAY CONCERN: This district has received an application for a Department of the Army permit pursuant to Section 10 of the Rivers and Harbors Act of 1899 (33 U.S.C. 403) and Section 404 of the Clean Water Act (33 U.S.C. 1344) as described below.

APPLICANT: Rilea Group
848 Brickell Avenue, Suite 1010
Miami, FL 33131

WATERWAY & LOCATION: The project is located in wetlands tributary to the Intracoastal Waterway on Dania Beach Boulevard east of U.S. 1 in Dania Beach in Section 35, Township 50 South, Range 42 East, Broward County, Florida.

DIRECTIONS TO SITE: Directions to the site are as follows: From Fort Lauderdale, take Interstate-95 to the I-595 east exit. Proceed east on I-595 to the U.S. 1 (Federal Highway) south exit. Proceed south on U.S. 1 to Dania Beach Boulevard. Turn left, head east, onto Dania Beach Boulevard. The site is approximately 1.5 miles on the north side of the road.

LATITUDE & LONGITUDE: Latitude 26° 03.28'North
Longitude 80° 07.76'West

PROJECT PURPOSE:

Basic: The basic project purpose is to construct a multi-family residential development.

Overall: The overall project purpose is to construct a condominium in Dania Beach with associated parking and surface water management facilities.

PROPOSED WORK: The proposed project consists of the construction of a condominium complex involving the placement of 5,000 cubic yards of fill in 0.76 acres of mangrove wetlands. The applicant proposes to develop 3.49 acres of the total 19.03 acres into condominiums with a parking structure and associated surface water management facilities. The proposed mitigation consists of preservation of the remaining 15.15 acres of mangroves and the creation of a 0.39-acre *Borrichea* marsh along the west property line. Evaluation of the final mitigation proposal will be based on the Estuarine Wetland Rapid Assessment Procedure (E-WRAP). For further details, see attached drawing numbers 1 - 9 dated 10/19/04.

EXISTING CONDITIONS: The project site consists of 19.03 acres of land. Wetlands on the site include 15.91 acres of mangrove forest with a canopy dominated by red mangrove (*Rhizophora mangle*), black mangrove (*Avicinnia germinans*), and white mangrove (*Laguncularia racemosa*). The edges of the wetland have been invaded by Australian Pine (*Casuarina equisetifolia*). A total of 2.73 acres of the development area is currently upland that is dominated by Australian Pine. Rag weed and other volunteer nuisance and exotic species occur in the upland area. The site is located immediately west of West Lake Park and is surrounded by undeveloped land.

ENDANGERED SPECIES: Based on information provided by the applicant, the Corps is not aware of any threatened or endangered species on the project site. Therefore, the Corps has determined that the proposed project is *not likely to adversely affect* any listed species or critical habitat. In a separate letter, the Corps is requesting concurrence on this determination, from the U.S. Fish and Wildlife Service, pursuant to Section 7 of the Endangered Species Act.

ESSENTIAL FISH HABITAT: This notice initiates the Essential Fish Habitat (EFH) consultation requirements of the Magnuson-Stevens Fishery Conservation and Management Act. The proposed project will impact by filling 0.76 acres of mangrove forest, which is designated as EFH for Federally managed fisheries and associated species as identified by the South Atlantic Fishery Management Council. These species may include, but are not excluded to, red drum (*Sciaenops ocellatus*), grey snapper (*Lutjanus griseus*), lane snapper (*Lutjanus synagris*), gag grouper (*Myctecoperca microlepis*) and penaeid shrimp (*Pinaeus spp.*). Our initial determination is that the proposed action will have a substantial

adverse impact on EFH or Federally managed fisheries in the south Atlantic. Mitigation has been proposed in the form of preservation of the majority of the mangrove forest and minimizing impacts as much as possible.

NOTE: *This public notice is being issued based on information furnished by the applicant. This information has not been verified.*

AUTHORIZATION FROM OTHER AGENCIES: A State Water Quality Certification/Permit may be required for this project. The Broward County Department of Planning and Environmental Protection is processing Environmental Resource Permit Application #ER031104-8 & Environmental Resource License #DF03-1237 for this project.

Comments regarding the application should be submitted in writing to the District Engineer at the above address within **30** days from the date of this notice.

If you have any questions concerning this application, you may contact Mr. Kenneth Huntington of this office either by letter at the letterhead address, by telephone at 561-472-3507, by e-mail at Kenneth.B.Huntington@saj02.usace.army.mil], or by fax at 561-626-6971.

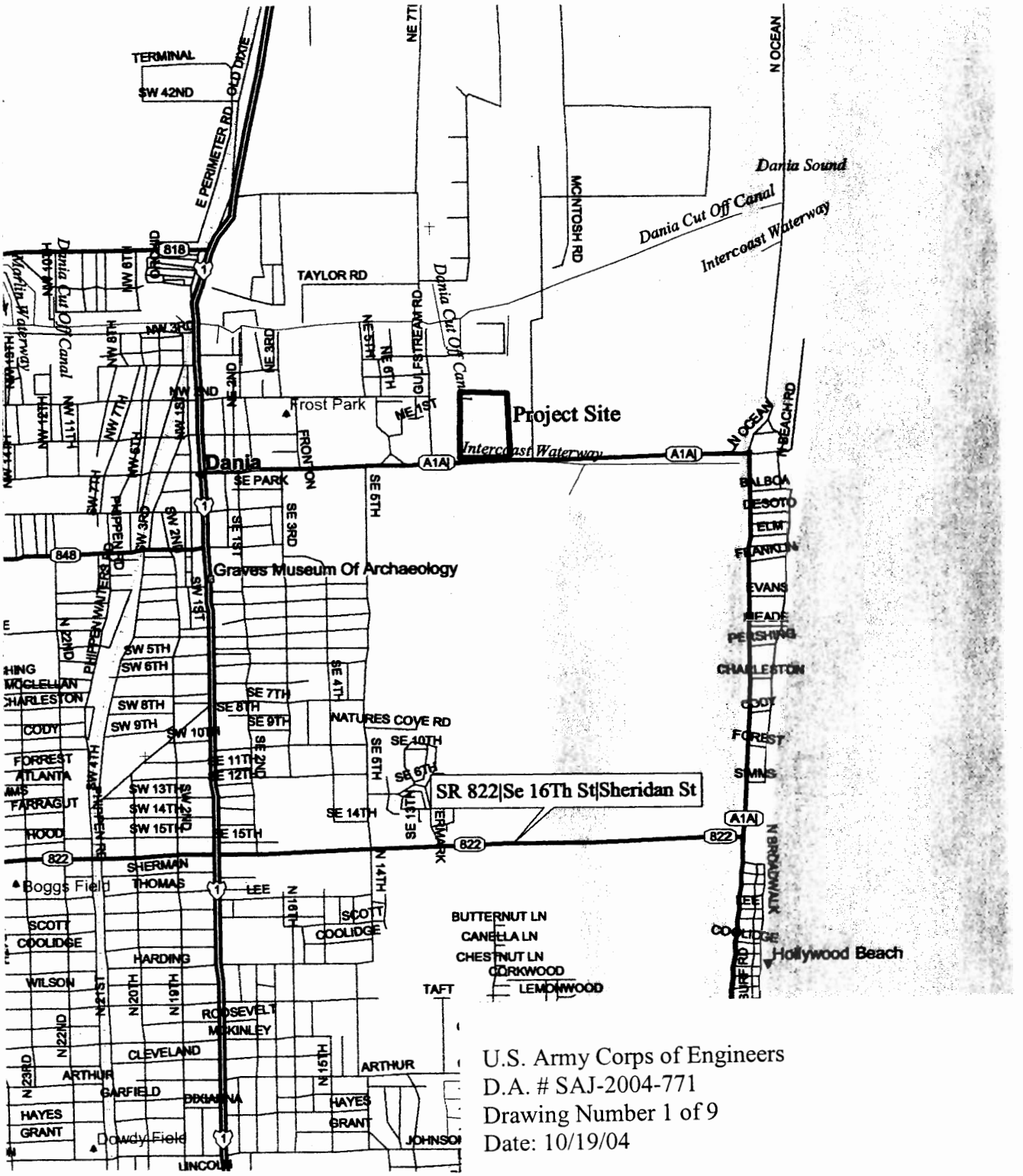

U.S. Army Corps of Engineers
D.A. # SAJ-2004-771
Drawing Number 1 of 9
Date: 10/19/04

J. J. GOLDASICH & ASSOCIATES, INC. (561)883-9555 Fax (561)883-0054 Professional Wetland Scientists Environmental Permitting and Consulting	Ocean Park at Dania Beach Rilea Group	REVISION	DATE 10/03
	Location Map Section 35, Township 50, Range 42 Dania Beach, Broward County		SHEET 1 of 1 SCALE:

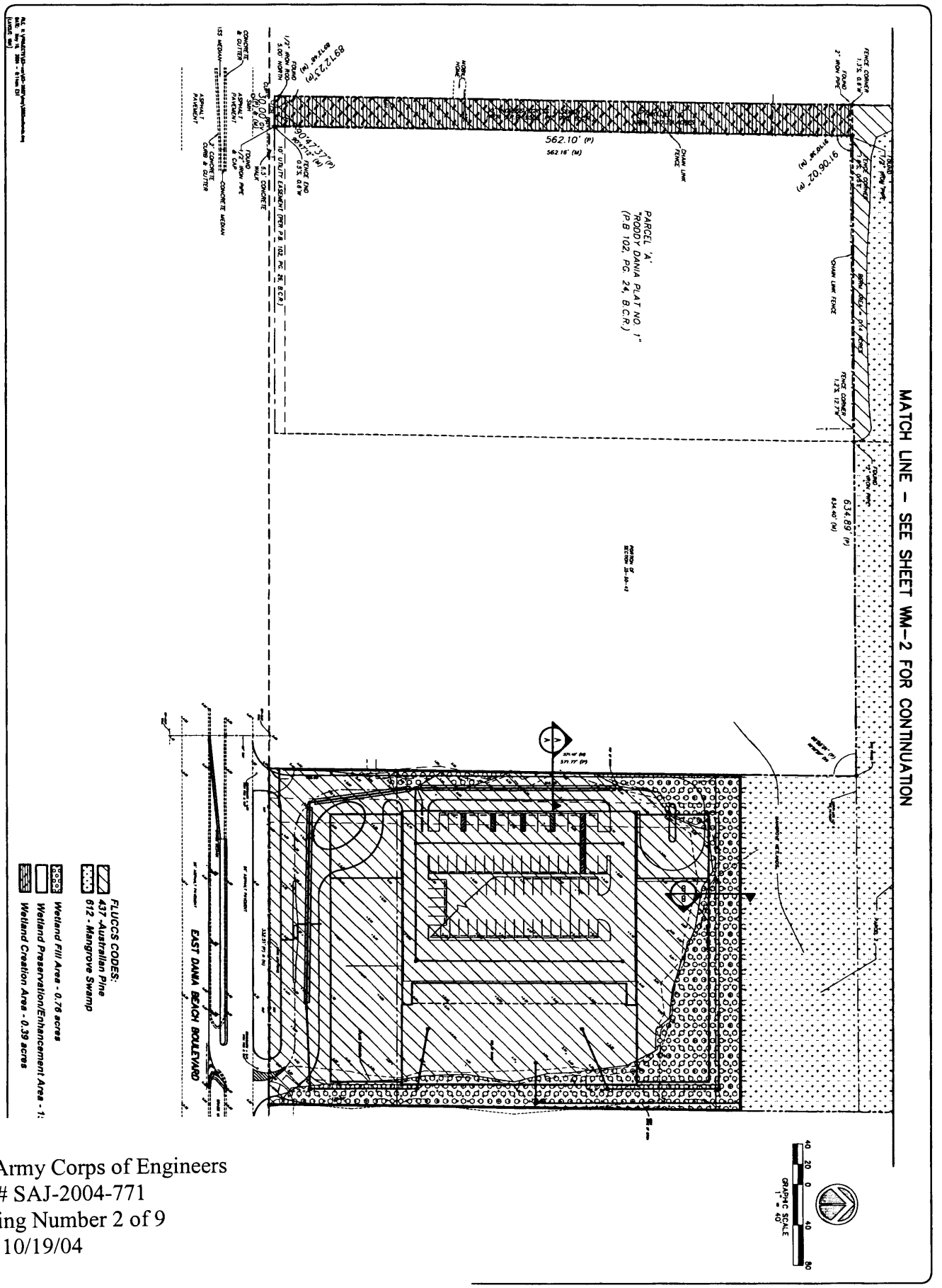

U.S. Army Corps of Engineers
D.A. # SAJ-2004-771
Drawing Number 2 of 9
Date: 10/19/04

SEAL	SHEET No. WM1	JOB NUMBER 03-2682	DRAWN BY: M.A.S.	DESIGNED BY: M.G.	SCALE: 1"=40'	DATE: OCT. 2003	OCEAN PARK @ DANIA BEACH DANIA BEACH FLORIDA WETLAND MITIGATION PLAN

REVISIONS

NO.	DATE	DESCRIPTION

TECH Sun-Tech Engineering, Inc.
Engineers - Planners - Surveyors
1600 West Oakland Park Boulevard
Ft. Lauderdale, FL 33311
E-Mail: suntech@suntechengineering.com
Business License # 1523
Phone (954)777-3123
Fax (954)777-3114

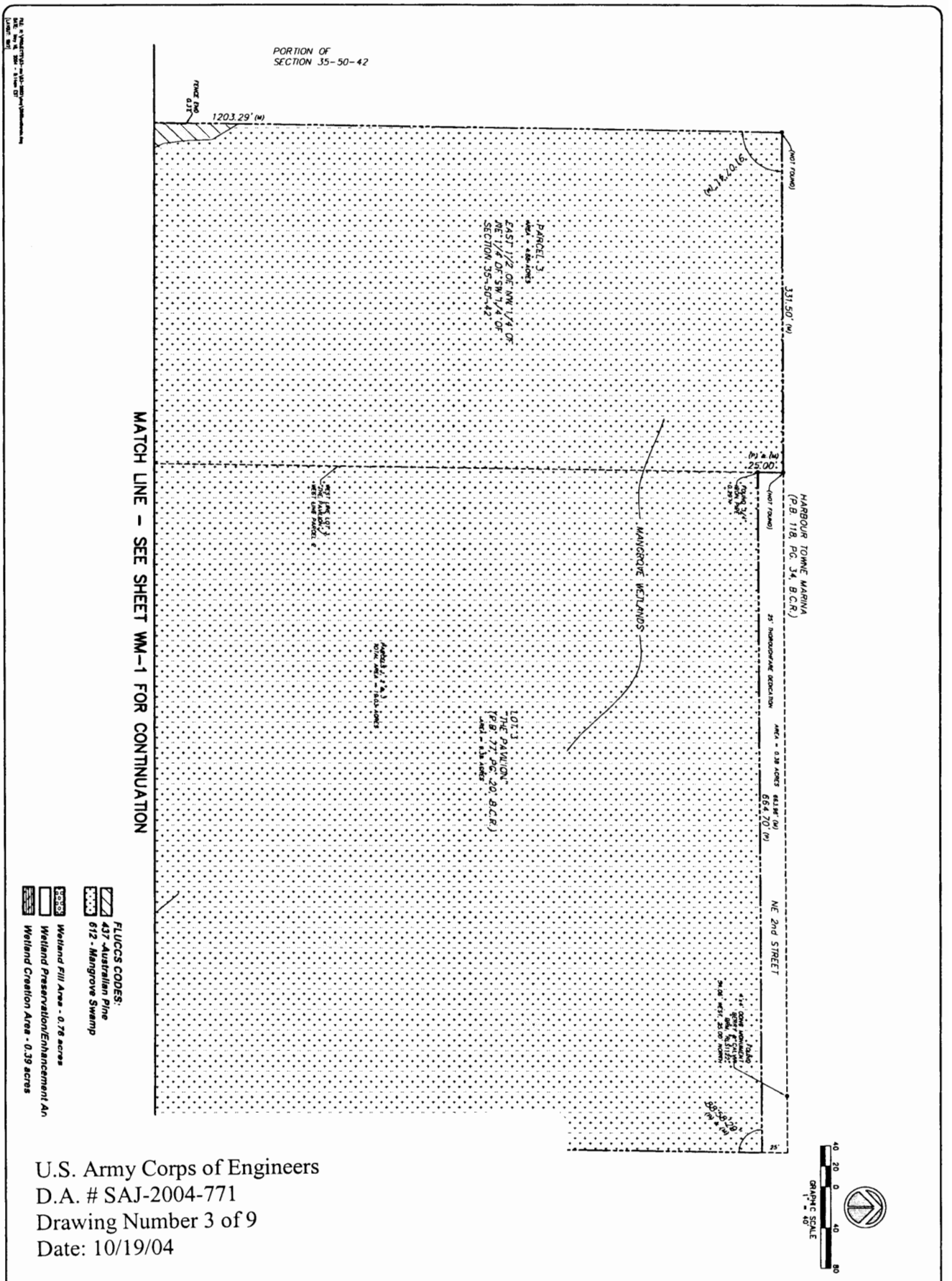

U.S. Army Corps of Engineers
D.A. # SAJ-2004-771
Drawing Number 3 of 9
Date: 10/19/04

SEAL	SHEET No.	JOB NUMBER	DRAWN BY	DESIGNED BY	SCALE	DATE
	WM2	03-2682	M.A.S.	M.G.	1"=40'	OCT. 2003

OCEAN PARK
@ DANIA BEACH

DANIA BEACH FLORIDA

WETLAND MITIGATION
PLAN

REVISIONS

NO.	DATE	DESCRIPTION

TECH Sun-Tech Engineering, Inc.
Engineers - Planners - Surveyors
1800 West Oakland Park Boulevard
Ft. Lauderdale, FL 33311
E-Mail: suntech@suntecheng.com
Business License # 1523
Phone (954)777-3123
Fax (954)777-3114

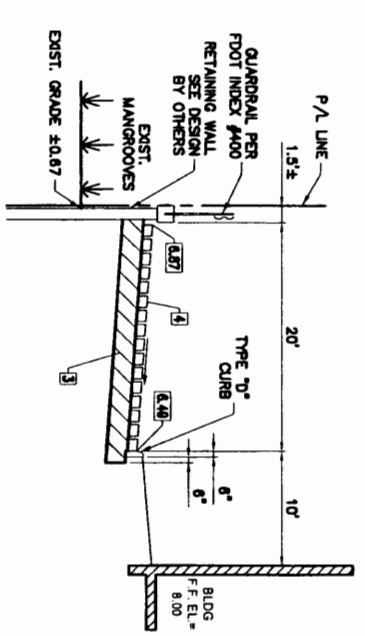

SECTION "B-B"

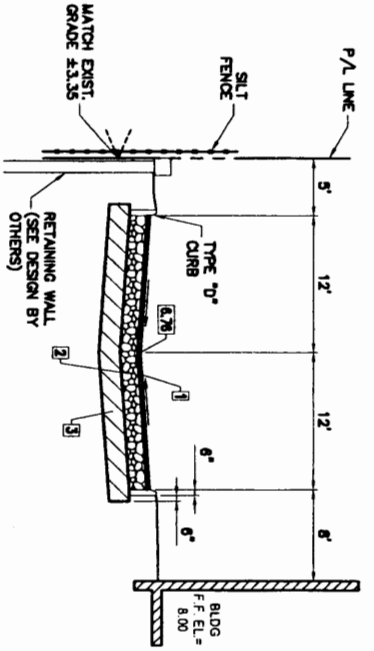

SECTION "A-A"

U.S. Army Corps of Engineers
D.A. # SAJ-2004-771
Drawing Number 4 of 9
Date: 10/19/04

SEAL	SHEET No. WM3	JOB NUMBER 03-2682	DRAWN BY: M.A.S.	DESIGNED BY: M.G.	SCALE: N.T.S.	DATE: OCT. 2003

OCEAN PARK
@ DANIA BEACH
DANIA BEACH FLORIDA
WETLAND MITIGATION
PLAN

REVISIONS

NO.	DATE	DESCRIPTION

Sun-Tech Engineering, Inc.
Engineers - Planners - Surveyors
1600 West Oakland Park Boulevard
Ft. Lauderdale, FL 33311
E-Mail: suntech@suntecheng.com
Business License # 1523
Phone (954)777-3123
Fax (954)777-3114

RILEA GROUP – OCEAN PARK AT DANIA BEACH

Onsite Wetland Mitigation Plan

The onsite wetland mitigation plan consists of the creation of a *Borrichia* marsh totaling 0.39 acres, and removal of any exotics in a 15.15 acre existing mangrove forest/marsh to be preserved. The proposed *Borrichia* marsh area is located on the western portion of the property and will be constructed in an area that currently contains Australian pine. The ground elevation will be excavated to approximately 1.5' NGVD so that it will be connected intertidally to the existing mangrove forest/marsh. Construction of the mitigation area includes lowering of the ground elevations by scraping the surface soils, removal of the underlying limestone and rock as necessary and stockpiling muck soils to be placed back in the top foot of the mitigation area for planting.

The wetland mitigation will be initiated 90 days after issuance of all necessary permits and licenses. The specific mitigation sequence will begin with the removal of the suitable soils and screening for future wetland soil. All unsuitable debris and exotic vegetation will be removed and disposed of in an appropriate manner. The mitigation area subsurface soils will be lowered to suitable wetland elevations. The suitable wetland soils will then be replaced and graded to achieve a habitat of mangroves, transitional berms, and flushing channels. Suitable wetland vegetation will be installed following permitting agency review of the graded wetland area.

The Baseline Mitigation Area Monitoring Report will be conducted prior to the removal of the upland and/or exotic vegetation and before beginning mitigation area work. Site visits will be initiated with permitting agency staff during the clearing and grading phase of the project so that the final design and wetland planting parameters may be discussed in the field.

It is anticipated that the wetland mitigation creation efforts will begin during February 2004 with the removal of the upland and/or exotic vegetation debris and surface soils. Wetland mitigation area earthwork will continue for approximately two (2) months wherein the ground elevations will be lowered as necessary to the proposed *Borrichia* marsh elevation of approximately 1.5' NGVD.

Following completion of the wetland mitigation area earthwork, an as-built survey of the area will be generated and reviewed for consistency with the mitigation plan. Field evaluations will be requested from DPEP and SFWMD compliance staff. Following the field evaluations and confirmation that the wetland mitigation area is at projected elevations the mitigation area will be planted according to the Wetland Mitigation Area Planting Plan, see attached plan.

Maintenance and monitoring of the wetland mitigation area will begin at the Time Zero Mitigation Monitoring Report and continue for a period of five years. Following the acceptance of the mitigation area and the Time Zero Monitoring Report, the five-year mitigation area maintenance and monitoring phase will begin. Monitoring reports will be submitted to Broward Co. DPEP on a quarterly basis.

Success criteria will be measured by percent cover of wetland plants within the mitigation area over the 5 year monitoring period as follows: 30% cover by the end of the 1st monitoring year, 50% cover by the end of the 2nd year and 80% by the end of the 3rd year and maintained thereafter for the duration of the monitoring period.

U.S. Army Corps of Engineers
D.A. # SAJ-2004-771
Drawing Number 5 of 9
Date: 10/19/04

RILEA GROUP – OCEAN PARK AT DANIA BEACH

Onsite Wetland Mitigation Area Monitoring and Maintenance Plan

The wetland mitigation area monitoring events will begin at the Time Zero event and continue for a period of five years. The wetland mitigation area will be monitored quarterly for planting success, amount of desirable wetland plant recruitment, wildlife utilization, exotic (as listed by the Exotic Pest Plant Council [EPPC]) and undesirable vegetation encroachment and physio-chemical conditions.

The staff gauge will be installed according to the attached permit sketches. The staff gauge will be read on a bi-weekly basis and the readings reported in the monitoring reports required by Broward Co. DPEP and Army Corps.

Pedestrian transects will be conducted during all quarterly site evaluations. Each quarterly monitoring event will include photographic documentation of existing conditions in the wetland mitigation area. The field transects, staff gauge, wildlife utilization and photographic reference points will be monitored and maintained throughout the five-year monitoring and maintenance period.

The results of the quarterly field evaluations will assist in identifying the progressive condition of the mitigation area and the impact of the hydrologic improvements resulting from the project. All monitoring event data will be utilized by maintenance crews as necessary to provide the most effective treatment of undesirable vegetation should invasion occur. This will ensure that the undesirable vegetation will be controlled prior to establishment and seed set. Further, the results of the quarterly monitoring events and the resulting treatment procedures will be included in the mitigation area monitoring reports, which will be provided to DPEP and the Army Corps. A survival rate of 80% of planted wetland species will be guaranteed by the licensee by the 3rd year with replanting if necessary.

All invasive exotic plants (as defined by EPPC) will be removed or killed (depending upon the most ecologically sensitive technique) in-place during the maintenance phase of the mitigation project. The elimination of the exotic vegetation will be coordinated with the permitting agency staff to provide the most appropriate control mechanism. All exotic and undesirable vegetation re-growth will be maintained at or below two percent (2%) coverage of the wetland mitigation area.

The applicant and/or condominium association will conduct the maintenance and monitoring of the wetland mitigation area for the five (5) years required by permits and license. This maintenance will help ensure that the conservation easement areas of the project will be maintained free from invasive exotic vegetation and nuisance plants according to the previously described criteria in perpetuity. The condominium association will then be responsible for maintenance of the mitigation area in perpetuity.

U.S. Army Corps of Engineers
D.A. # SAJ-2004-771
Drawing Number 6 of 9
Date: 10/19/04

U.S. Army Corps of Engineers
D.A. # SAJ-2004-771
Drawing Number 7 of 9
Date: 10/19/04

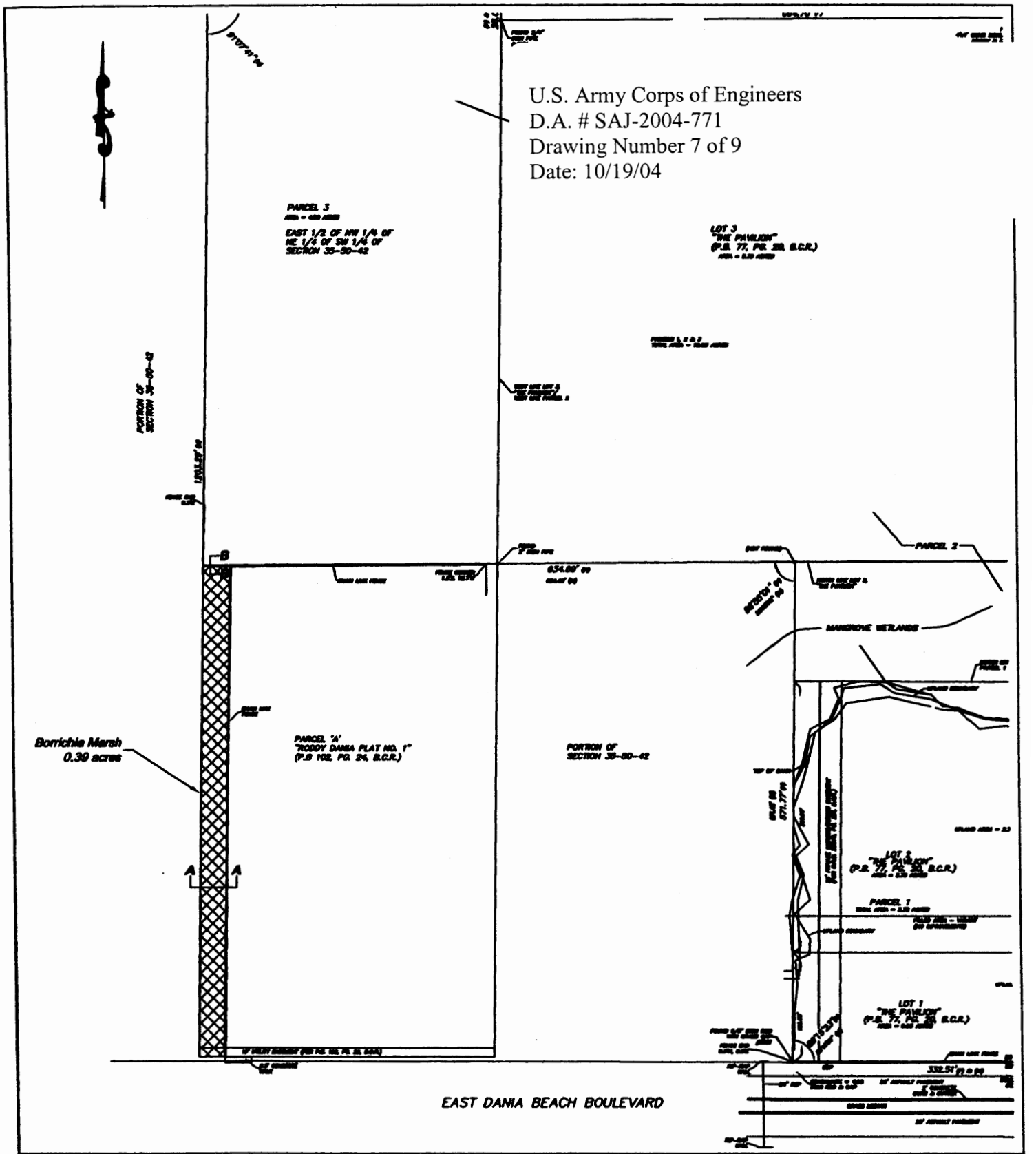

J.J. Goldasich & Assoc., Inc. (561) 883-9555 Fax (561) 883-0054	RILEA GROUP OCEAN PARK AT DANIA BEACH	DATE: 10/03	SCALE:1"=150'	Sheet 1 of 2
		Date	Revision	
Environmental Consultants Professional Wetland Scientists	0.39-Acre Borrichia Marsh Area Section 35, Township 50, Range 42 Broward County			

U.S. Army Corps of Engineers
D.A. # SAJ-2004-771
Drawing Number 8 of 9
Date: 10/19/04

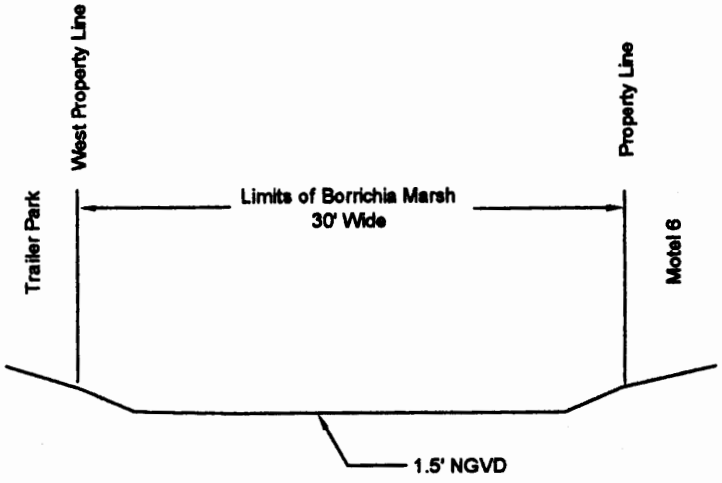

Cross-Section A-A

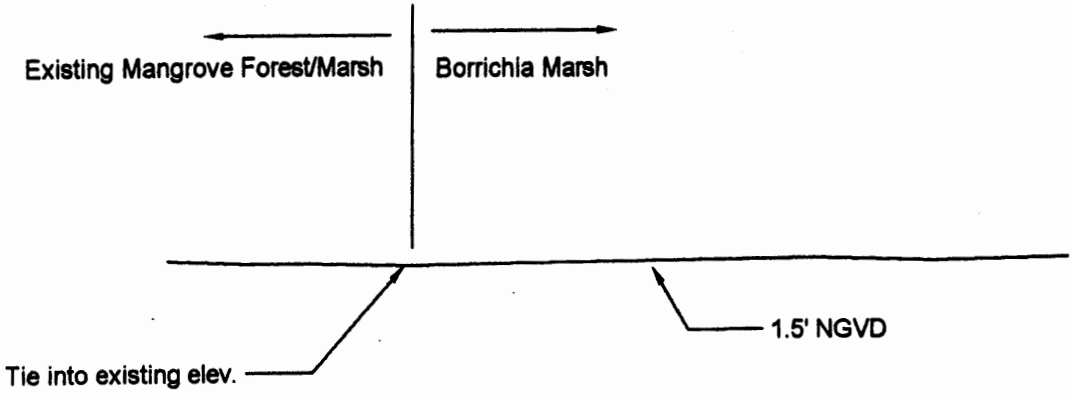

Cross-Section B-B

J.J. Goldasich & Assoc., Inc. *(561) 883-9555* *Fax (561) 883-0054*	RILEA GROUP OCEAN PARK AT DANIA BEACH	DATE: 10/03	SCALE:NTS	Sheet 2 of 2
		Date	Revision	
Environmental Consultants Professional Wetland Scientists	0.39-Acre Borrichia Marsh Area Cross Sections Section 35, Township 50, Range 42 Broward County			

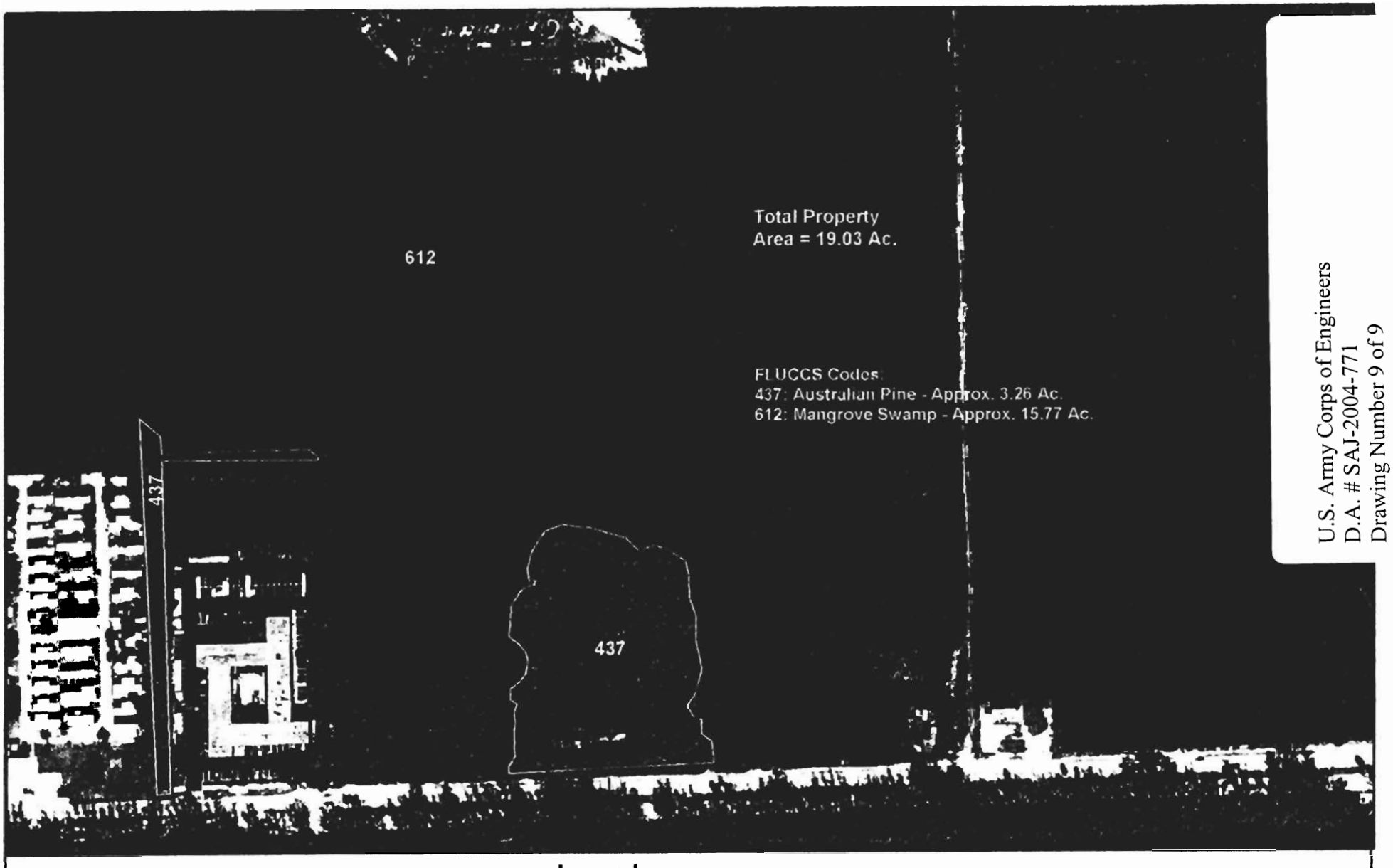

U.S. Army Corps of Engineers
D.A. # SAJ-2004-771
Drawing Number 9 of 9
Date: 10/19/04

Legend

Property Boundary

Upland Line

© All Rights Reserved, JJ Goldasich and Associates, Inc., 2003

N

0 30 60 120 180 240

Feet

Ocean Park at Dania Beach
Rilea Group

FLUCCS Map
Section 35, Township 50, Range 42
Broward County

Revision	Date

J.J. GOLDASICH & ASSOCIATES, INCORPORATED
(561) 883-9555 Fax (561) 883-0054
Professional Wetland Scientists, Environmental Permitting and Consulting

Date	10/03
Sheet	1 of 1
SCALE: 1"=240'	
Project #	02-797

IMPACT ON NATURAL RESOURCES: Preliminary review of this application indicates that an Environmental Impact Statement will not be required. Coordination with U.S. Fish and Wildlife Service, Environmental Protection Agency (EPA), the National Marine Fisheries Services, and other Federal, State, and local agencies, environmental groups, and concerned citizens generally yields pertinent environmental information that is instrumental in determining the impact the proposed action will have on the natural resources of the area. By means of this notice we are soliciting comments on the potential effects of the project on threatened or endangered species or their habitat.

IMPACT ON CULTURAL RESOURCES: Review of the latest published version of the National Register of Historic Places indicates that no registered properties, or properties listed as eligible or inclusion therein, are located at the site of the proposed work. Presently, unknown archeological, scientific, prehistorical, or historical data may be lost or destroyed by the work to be accomplished.

EVALUATION: The decision whether to issue a permit will be based on an evaluation of the probable impact including cumulative impacts of the proposed activity on the public interest. That decision will reflect the national concern for both protection and utilization of important resources. The benefits, which reasonably may be expected to accrue from the proposal, must be balanced against its reasonably foreseeable detriments. All factors which may be relevant to the proposal will be considered including cumulative impacts thereof; among these are conservation, economics, esthetics, general environmental concerns, wetlands, historic properties, fish and wildlife values, flood hazards, floodplain values, land use, navigation, shoreline erosion and accretion, recreation, water supply and conservation, water quality, energy needs, safety, food and fiber production, mineral needs, considerations of property ownership, and, in general, the needs and welfare of the people. Evaluation of the impact of the activity on the public interest will also include application of the guidelines promulgated by the Administrator, EPA, under authority of Section 404(b) of the Clean Water Act of the criteria established under authority of Section 102(a) of the Marine, Protection, Research, and Sanctuaries Act of 1972. A permit will be granted unless its issuance is found to be contrary to the public interest.

The U.S. Army Corps of Engineers (Corps) is soliciting comments from the public; Federal, State, and local agencies and officials; Indian Tribes; and other interested parties in order to consider and evaluate the impacts of this proposed activity. Any comments received will be considered by the Corps of Engineers to determine whether to issue, modify, condition or deny a permit for this proposal. To make or deny this decision, comments are used to assess impacts on endangered species, historic properties, water quality, general environmental effects, and the other public interest factors listed above. Comments are used in the preparation of an Environmental Assessment and/or an Environmental Impact Statement pursuant to the National Environmental Policy Act. Comments are also used to determine the need for a public hearing and to determine the overall public interest of the proposed activity.

COASTAL ZONE MANAGEMENT CONSISTENCY: In Florida, the State approval constitutes compliance with the approved Coastal Zone Management Plan. In Puerto Rico, a Coastal Zone Management Consistency Concurrence is required from the Puerto Rico Planning Board. In the Virgin Islands, the Department of Planning and Natural Resources permit constitutes compliance with approved Coastal Zone Management Plan.

REQUEST FOR PUBLIC HEARING: Any person may request a public hearing. The request must be submitted in writing to the District Engineer within the designated comment period of the notice and must state the specific reasons for requesting the public hearing.

John R. Hall
John R. Hall
Chief, Regulatory Division