SAFETY ON THIS JOB DEPENDS ON YOU

REVISIONS					
NO.	SYM	ZONE	DESCRIPTION	DATE	APPROVED
1	A	A-1	REVISED TO ACCOMPANY AMENDMENT NO. 0003	12-1-93	

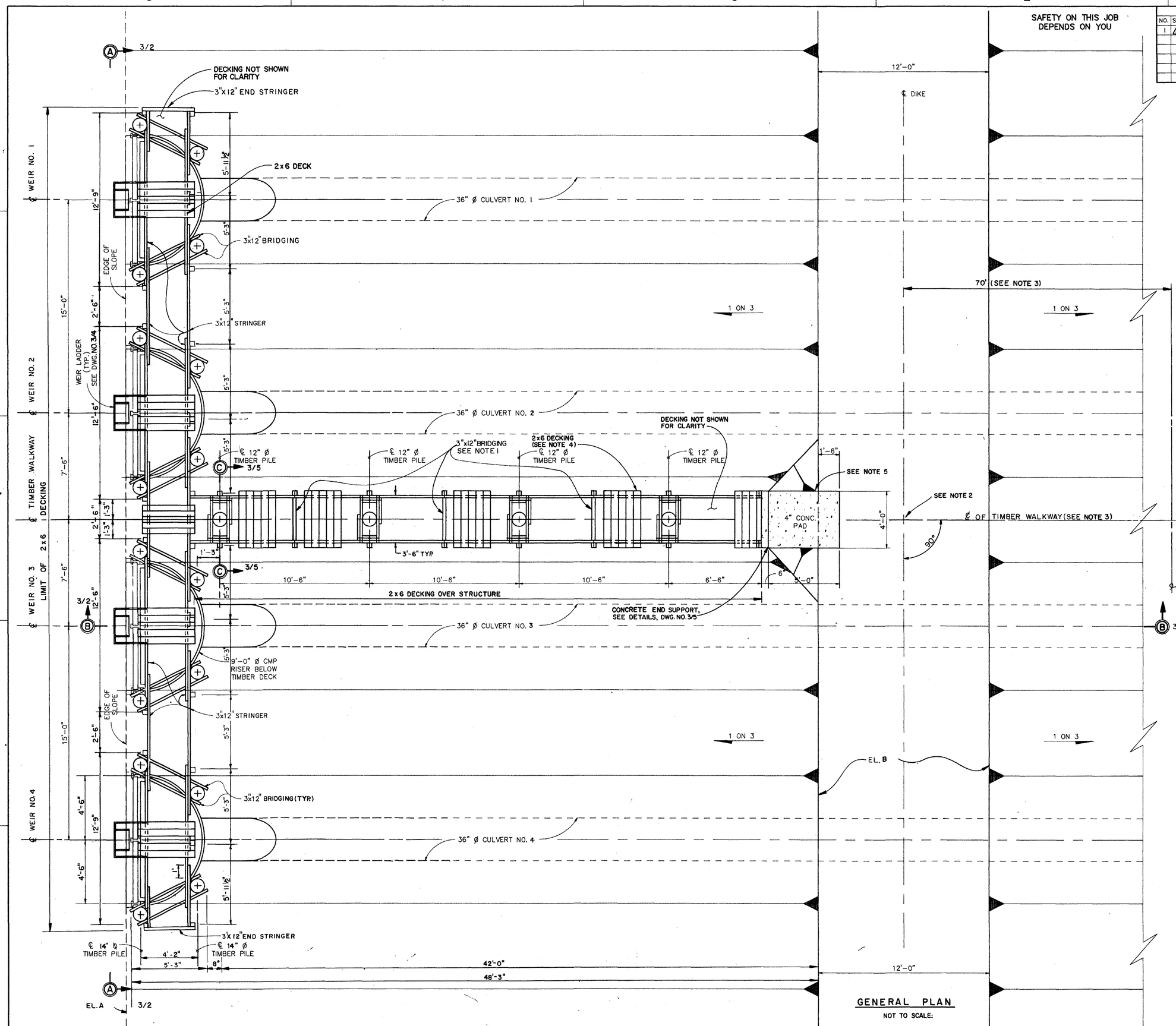

GENERAL PLAN

NOT TO SCALE:

ELEVATION TABLE (FEET)		
SITE	A	B
DU-2	8.0	24.0
DU-8	8.2	24.2

NOTES:

1. STRINGER AND BRIDGING SHALL BE FASTENED TOGETHER WITH HURRICANE 16 GAGE(MIN) ANCHORS (TYPICAL). (MINIMUM ONE AT EACH END).
2. FOR CONTROL POINT OF DU-2, SEE DWG. NO. 2/3 FOR CONTROL POINT OF DU-8, SEE DWG. NO. 2/7.
3. FOR DU-2, SEE DWG. NO. 2/4 AND FOR DU-8, SEE DWG. NO. 2/8.
4. 2 x 6 DECKING SHALL BE ATTACHED TO 3"x12" STRINGERS WITH A MINIMUM OF 3-304 GALVANIZED SPIRAL SHANK NAILS AT EACH END. SPACE DECKING 1/4" APART.
5. REINFORCE 4" SLAB WITH 6x6-W1.4xW1.4 WELDED WIRE FABRIC. WELDED WIRE SHALL CONFORM TO ASTM A 185.

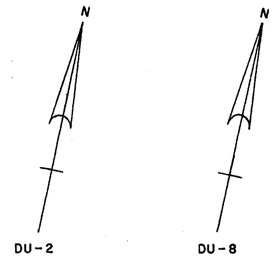

DEPARTMENT OF THE ARMY
JACKSONVILLE DISTRICT, CORPS OF ENGINEERS
JACKSONVILLE, FLORIDA

ATLANTIC INTRACOSTAL WATERWAY
NORFOLK, VA. AND THE ST. JOHNS RIVER, FLA.
AND
INTRACOSTAL WATERWAY,
JACKSONVILLE TO MIAMI, FLA.

D/A CONSTRUCTION DU-2 AND DU-8

WEIRS AND WALKWAYS
GENERAL PLAN

DESIGN ENG.: J.D.H.			
DWN. BY: T.L.	CKD. BY: H.E.W	INV. NO.	SIZE F / DWG. NO. 3/1
		DATED:	
SCALE: NO SCALE	DATED: JULY 1993	SHEET	OF

D. O. FILE NUMBER 8D-36,479

SAFETY ON THIS JOB DEPENDS ON YOU

REVISIONS					
NO.	SYM	ZONE	DESCRIPTION	DATE	APPROVED
1	A	A-1	REVISED TO ACCOMPANY AMENDMENT NO. 0003	12-1-93	HEW

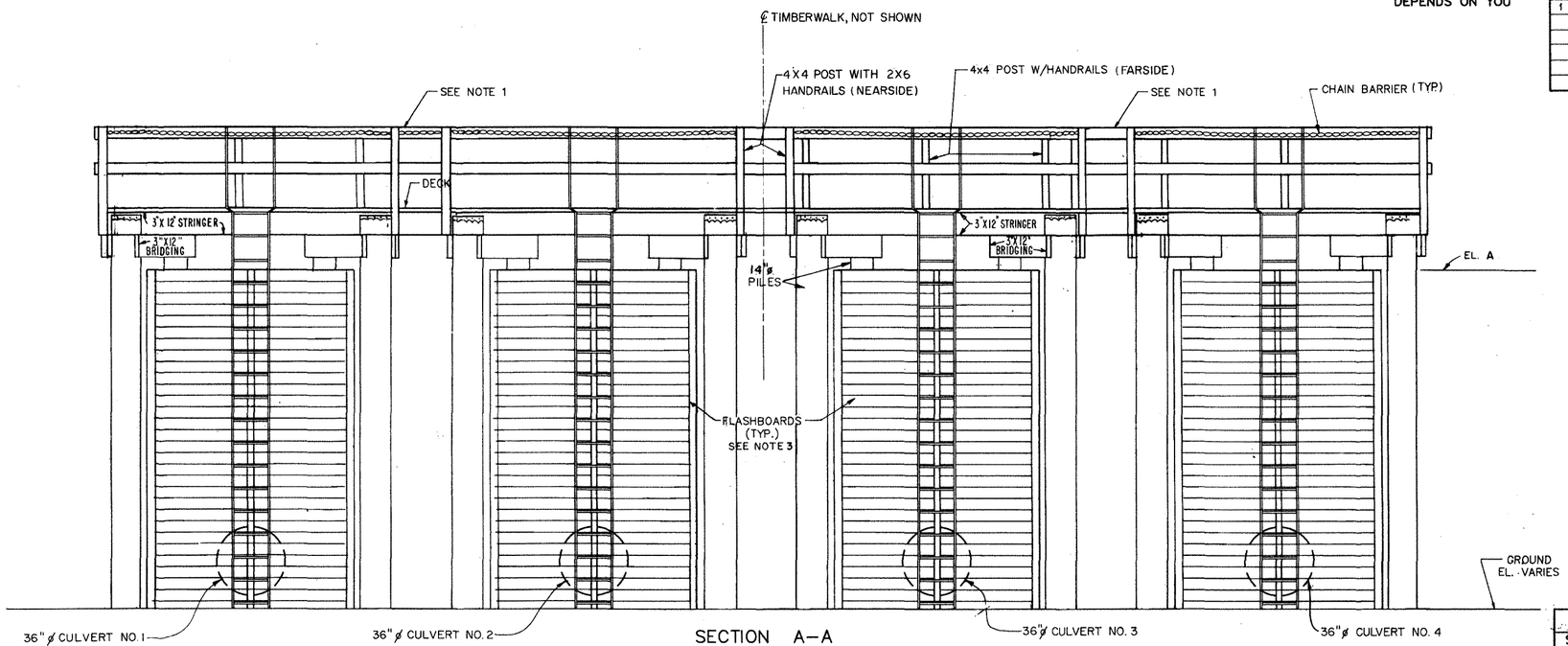

SECTION A–A

SCALE: "A"

NOTE:

1. 2x6 HANDRAILS SHALL BE PLACED BETWEEN WIERS.
2. FOR LOCATIONS OF SECTIONS SEE DWG. NO. 3/1.
3. PROVIDE ONLY 20 FLASHBOARDS FOR THIS CONTRACT. THESE FLASHBOARDS SHALL BE USED TO VERIFY FIT OF FLASHBOARDS.
4. PILE SHOES SHALL ONLY BE USED ON 14" DIAMETER PILES.

STRUCTURAL ELEVATION TABLE (FEET)

SITE	A	B	C	D	E	F	G	H	I
DU-2	23.0	25.5	24.3	24.0	15.5	8.5	23.0	5.96	8.0
DU-8	23.2	25.7	24.5	24.2	15.7	8.7	23.2	6.16	8.2

PILE TIP ELEVATION (FEET)

SITE	A	B	C
DU-2	-18.0	-10	-5
DU-8	-19.0	-10	-5

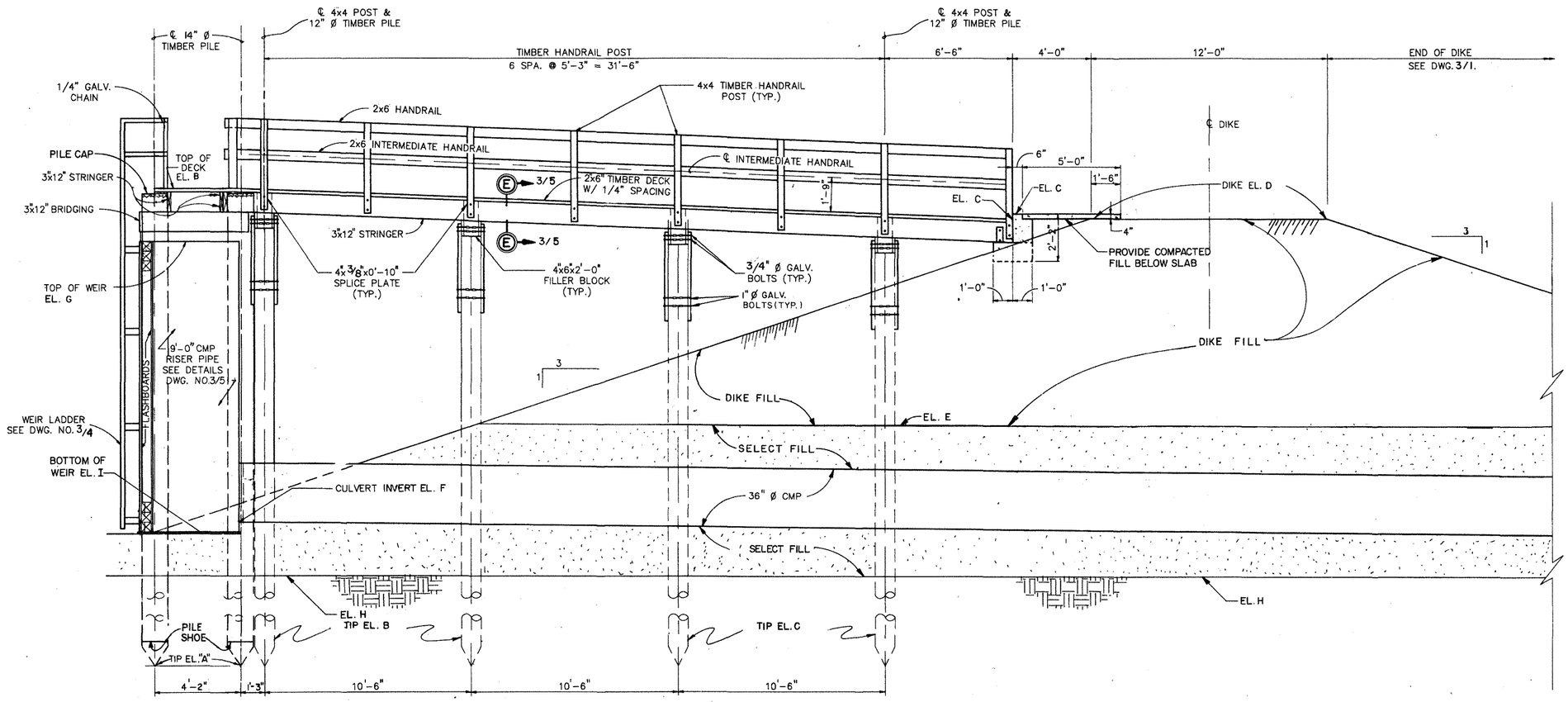

SECTION B–B

SCALE: "A"

GRAPHIC SCALE

"A" 2' 1' 0 2' 4' 6'

DEPARTMENT OF THE ARMY
JACKSONVILLE DISTRICT, CORPS OF ENGINEERS
JACKSONVILLE, FLORIDA

ATLANTIC INTRACOSTAL WATERWAY
NORFOLK, VA. AND THE ST. JOHNS RIVER, FLA.
AND
INTRACOSTAL WATERWAY,
JACKSONVILLE TO MIAMI, FLA.

D/A CONSTRUCTION DU-2 AND DU-8
WEIRS AND WALKWAYS
SECTIONS

DESIGN ENG.: J.D.H.			
DWN BY: T.L.	CKD BY: H.E.W.	INV. NO. / DATED:	SIZE F / DWG. NO. 3/2
SCALE: AS SHOWN	DATED: JULY 1993	SHEET	

D. O. FILE NUMBER 8D-36,479

SAFETY ON THIS JOB DEPENDS ON YOU

REVISIONS					
NO.	SYM	ZONE	DESCRIPTION	DATE	APPROVED
1	A	A-1	REVISED TO ACCOMPANY AMENDMENT NO. 0003	12-1-93	

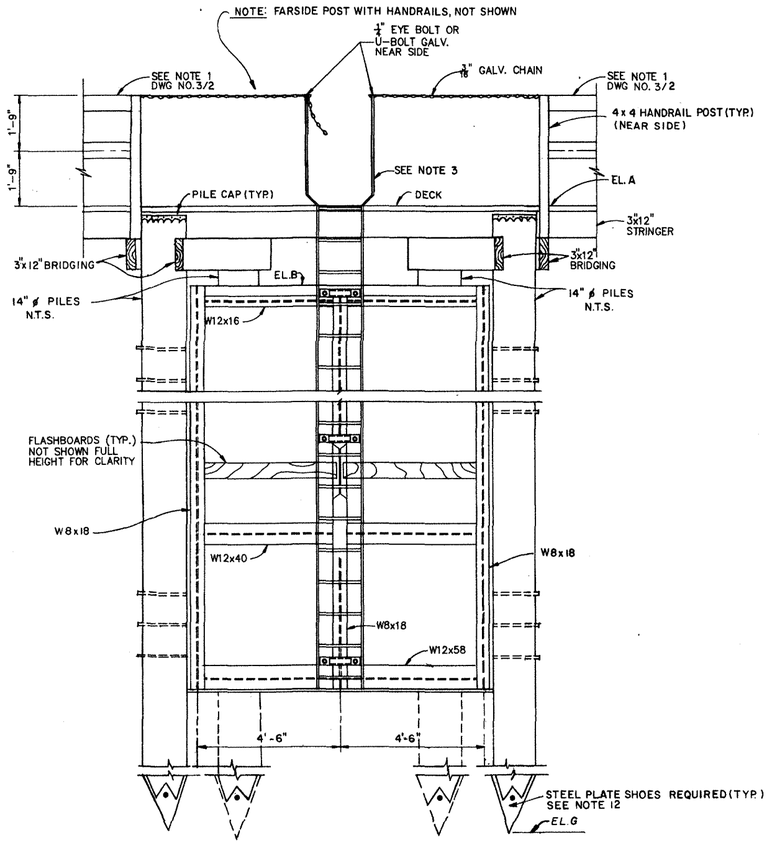

ELEVATION
SCALE: "A"

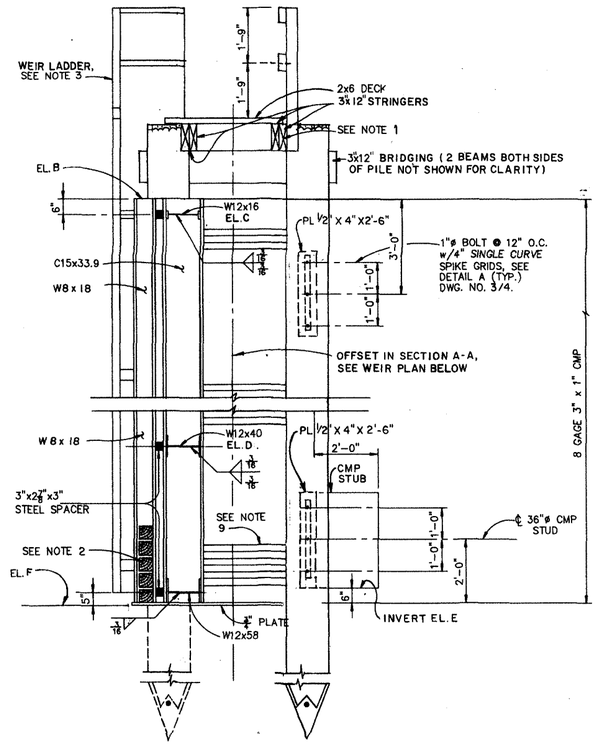

SECTION A-A
SCALE: "A"

GENERAL WELDING NOTES:

1A. WELDING SYMBOLS ARE THOSE ADOPTED BY THE AMERICAN WELDING SOCIETY AND INDICATE ONLY SIZE AND TYPE OF WELDS REQUIRED. DETAILED INFORMATION SHALL BE SUBMITTED BY THE CONTRACTOR FOR APPROVAL.

2A. THE CONTRACTORS SHOP DRAWINGS SHALL CEARLY DISTINGUISH BETWEEN SHOP AND FIELD WELDS. LENGTH OF WELD CALLED FOR ON THE DRAWINGS SHALL BE THE EFFECTIVE LENGTH.

3A. WELDING SYMBOL SHOWN THUS ——< TYP. MEANS THAT ALL SIMILAR JOINTS IN THIS VIEW SHALL BE WELDED IN THIS MANNER.

ELEVATION TABLE IN FEET							
SITE	A	B	C	D	E	F	G
DU-2	25.5	23.0	22.5	14.0	-8.5	8.0	-18.0
DU-8	25.7	23.2	22.7	14.2	-8.7	8.2	-19.0

NOTES:

1. THE STRINGER AGAINST THE TIMBER PILE SHALL BE BOLTED WITH 3/4" ø GALVANIZED BOLT AND WASHERS.
2. FLASHBOARDS SHALL BE 6"x 6" UNDRESSED AND FULL DIMENSION.
3. FOR WEIR LADDER DETAILS SEE DRAWING NO. 3/4.
4. ALL BOLTS SHALL BE FURNISHED WITH ONE NUT AND WASHER, UNLESS OTHERWISE INDICATED. ALL BOLTS, NUTS AND WASHERS SHALL BE HOT DIPPED GALVANIZED.
5. WELD C15x33.9 TO THE CORRUGATED METAL PIPE PROVIDING A 1/2 INCH FILLET WELD LENGTH (MINIMUM) AT EACH CORRUGATION CREST FOR THE ENTIRE LENGTH OF CHANNEL.
6. THE CONNECTION BETWEEN THE 9'ø CMP AND 3'ø CMP SHALL BE AS RECOMMENDED BY THE MANUFACTURER, WELDED AND AS STRONG AS THE 3'ø CMP.
7. COAT CONNECTING BANDS, RODS, LUGS, NUTS AND STRUCTURAL SHAPES WITH ONE COAT OF COLD APPLIED BITUMINOUS COATING CONFORMING TO AASHTO M243.
8. THE SPACER SHALL BE A SIZE WHICH SETS SAME VERTICAL DISTANCE OF W8x8 TO THE W12 MEMBERS.
9. CULVERT PIPE SHALL BE 12 GAGE RISER PIPE SHALL BE 8 GAGE WITH 3"x 1" CORRUGATIONS.
10. AFTER FABRICATION, THE STRUCTURAL SHAPES (LADDERS AND WEIRS) SHALL BE PAINTED WITH SYSTEM NO. 6-A-2. REFER TO PAINT SPEC. SECTION 09947.
11. PROVIDE ONLY 20 FLASHBOARDS FOR THIS CONTRACT. THESE FLASHBOARDS SHALL BE USED TO VERIFY FIT.
12. PROVIDE PILE SHOES ONLY ON 14" DIAMETER PILES.

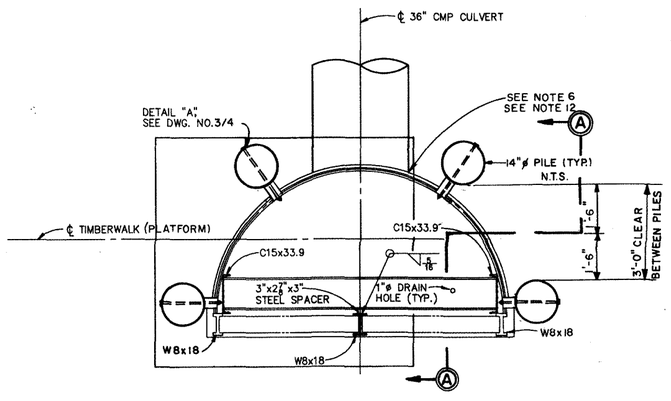

WEIR PLAN
SCALE: "A"

GRAPHIC SCALES:

"A" 1' 6" 0 1' 2' 3' 4' 5'

DEPARTMENT OF THE ARMY
JACKSONVILLE DISTRICT, CORPS OF ENGINEERS
JACKSONVILLE, FLORIDA

ATLANTIC INTRACOASTAL WATERWAY
NORFOLK, VA., TO ST. JOHNS RIVER, FLORIDA
AND
INTRACOASTAL WATERWAY
JACKSONVILLE TO MIAMI, FLA.

D/A CONSTRUCTION DU-2 AND DU-8
WEIRS AND WALKWAYS
DETAILS NO. 1

DESIGN ENG. : J.D.H.		INV. NO.	SIZE F	DWG. NO. 3/3
DWN. BY: T.D.L.	CKD. BY: H.E.W.	DATED:		
		SCALE: AS SHOWN	DATED: JULY 1993	SHEET

D. O. FILE NO. 8D-36,479