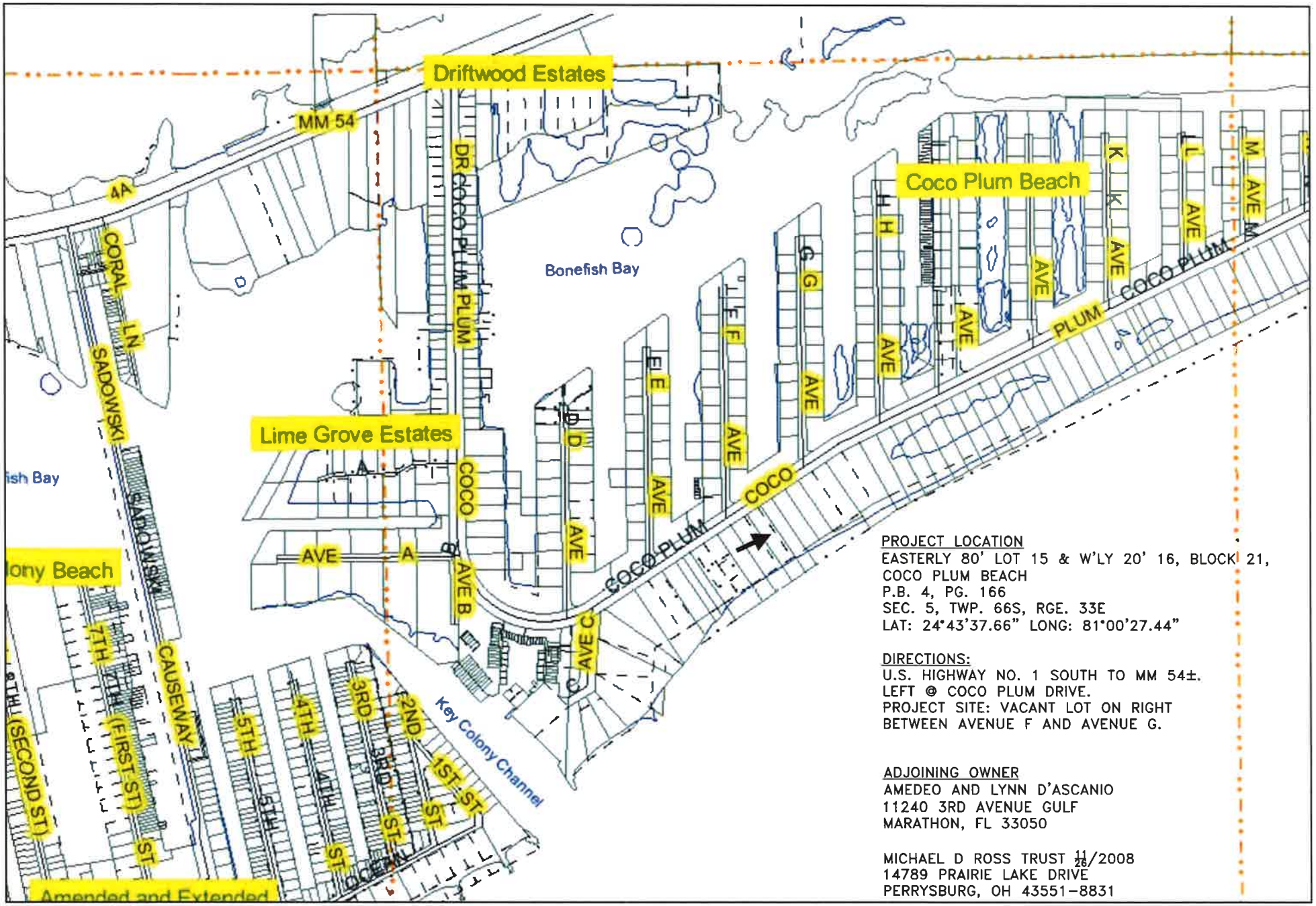

PROJECT LOCATION
EASTERLY 80' LOT 15 & W'LY 20' 16, BLOCK 21,
COCO PLUM BEACH
P.B. 4, PG. 166
SEC. 5, TWP. 66S, RGE. 33E
LAT: 24°43'37.66" LONG: 81°00'27.44"

DIRECTIONS:
U.S. HIGHWAY NO. 1 SOUTH TO MM 54±.
LEFT @ COCO PLUM DRIVE.
PROJECT SITE: VACANT LOT ON RIGHT
BETWEEN AVENUE F AND AVENUE G.

ADJOINING OWNER
AMEDEO AND LYNN D'ASCANIO
11240 3RD AVENUE GULF
MARATHON, FL 33050

MICHAEL D ROSS TRUST 11/26/2008
14789 PRAIRIE LAKE DRIVE
PERRYSBURG, OH 43551-8831

SHEET 1 OF 3	1	DATE: 01/03/13	GLEN BOE AND ASSOCIATES, INC. # 4061 5800 OVERSEAS HIGHWAY, SUITE 4, MARATHON, FL 33050 Telephone (305) 743-9121 Fax (305) 743-9197 Email: glenboe@bellsouth.net	FILL FOR RESIDENCE - PART LOT 15 & PART LOT 16 FOR SPECIAL ACQUISITIONS HOLDINGS INC MARATHON, MONROE COUNTY, FL	LOCATION & VICINITY MAP SCALE: AS SHOWN

REVISIONS:

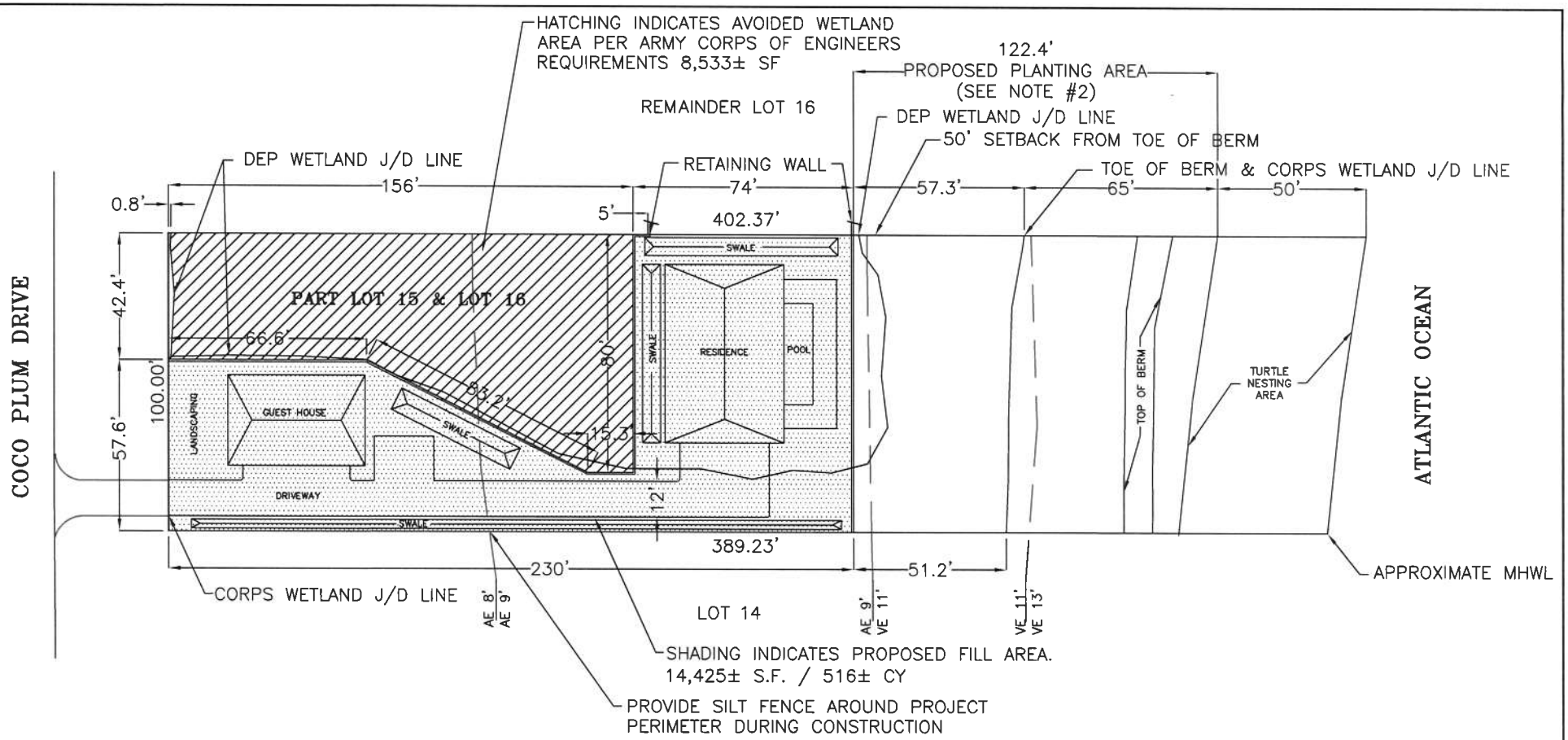

DEP WETLAND J/D AREA	= 14,872 SQ. FT.		TOTAL AREA OF DISTURBED SALT MARSH HABITAT	=	14,872 SQ. FT.
CORPS WETLAND J/D AREA	= 28,238 SQ. FT.		MARATHON COMPREHENSIVE PLAN REQUIRED OPEN SPACE (60%)	=	8,923 SQ. FT.
FILL WITHIN DEP WETLAND J/D AREA	= 5,870 SQ. FT.		ACTUAL OPEN SPACE	=	8,979 SQ. FT.
FILL WITHIN CORPS WETLAND J/D AREA	= 14,413 SQ. FT.				

NOTES:

1. FILL SHAL BE RETAINED WITH A WOOD, CONCRETE OR SIMILAR RETENTION WALL.

2. THE PROJECT SITE SHALL BE KEPT FREE OF INVASIVE EXOTIC PLANT SPECIES. THE PROPOSED PLANTING AREA IS 130,187 SQ FT. SHALL BE UTILIZED FOR BEACH/DUNE ENHANCEMENT AND PLANTED WITH PLANT SPECIES FROM THE CITY OF MARATHON'S NATIVE PLANT TABLE. PLANT SPECIES SHALL INCLUDE INK BERRY (SCAEVOLA PLUMERIA), SEA-GRAPE (COCCOLOBA UVIFERA), BAY CEDAR (SURIANA MARITIME), CORDGRASS (SPARTINA PATENS), SEVENYEAR APPLE (CASASIA CLUSIIFOLIA), CHRISTMAS BERRY (LYCIUM CAROLINIANUM), GOLDEN CREEPER (EMODEA LITTORALIS), SEA DAISY (BORRICHIA FRUTESCENS) SEA OXEYE (BORRICHIA ARBORESCENS), AND BUTTONWOOD (CANOCARPUS ERETUC).

3. THE TURTLE NESTING AREA IS LOCATED WITHIN 50' SETBACK TO THE MHWL. THE DESIGN & DEVELOPMENT OF THE RESIDENCE AND CONSTRUCTION ACTIVITIES SHALL COMPLY WITH THE FWS, FWCC AND CITY OF MARATHON SEA TURTLE PROTECTION GUIDELINES.

SITE PLAN

SCALE: 1" = 50'

N

SHEET 2 OF 3

2

DATE: 01/30/13

GLEN BOE AND ASSOCIATES, INC. # 4061
5800 OVERSEAS HIGHWAY, SUITE 4, MARATHON , FL 33050
Telephone (305) 743-9121 Fax (305) 743-9197
Email: glenboe@bellsouth.net

FILL FOR RESIDENCE - PART LOT 15 & PART LOT 16
FOR SPECIAL ACQUISITIONS HOLDINGS INC
MARATHON, MONROE COUNTY, FL

CERTIFIED BY:
SEAN KIRWAN, P.E. #57506

REVISIONS:

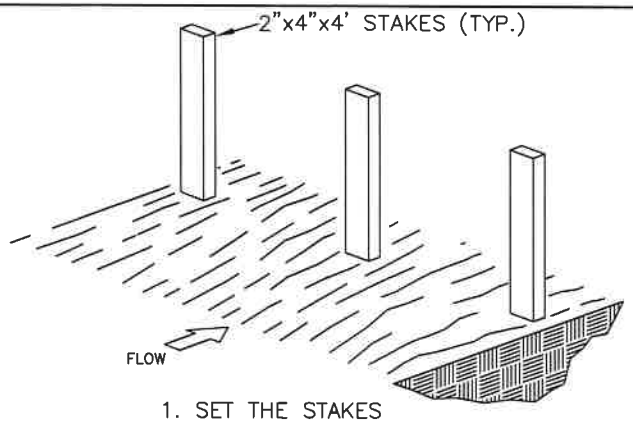

1. SET THE STAKES

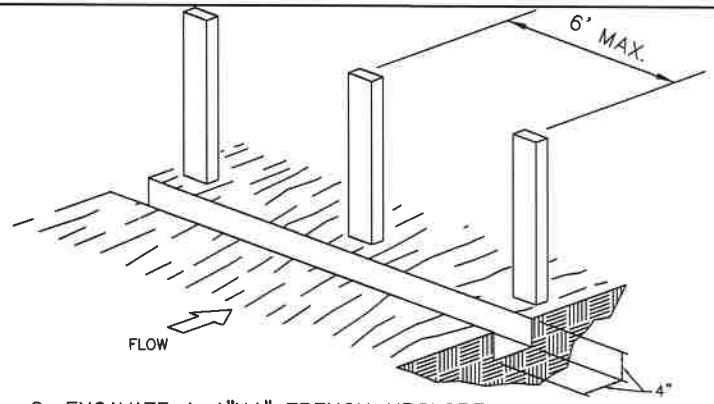

2. EXCAVATE A 4"X4" TRENCH UPSLOPE ALONG THE LINE OF STAKES.

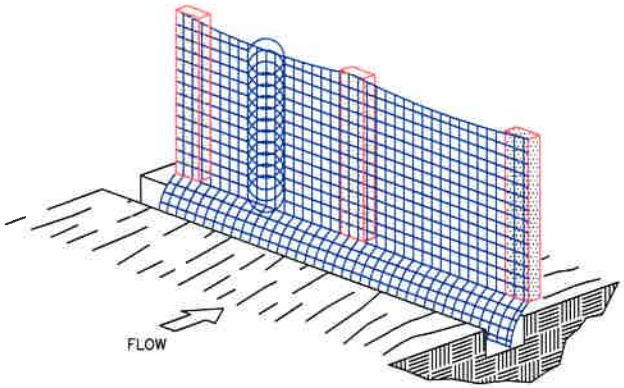

3. STAPLE FILTER MATERIAL TO STAKES AND EXTEND IT INTO THE TRENCH.

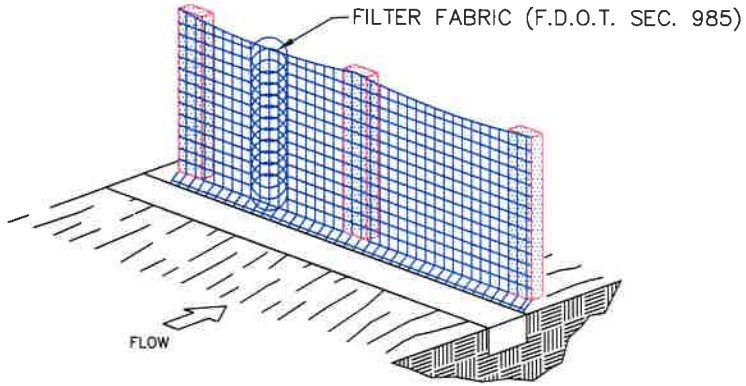

4. BACKFILL AND COMPACT THE EXCAVATED SOIL.

F.D.O.T. TYPE III FILTER FENCE

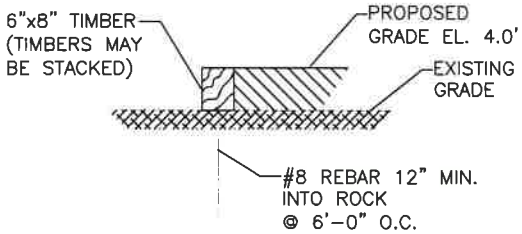

RETAINING WALL OPTION "A"
N.T.S.

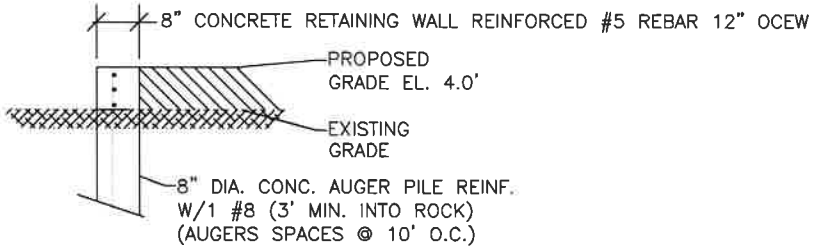

RETAINING WALL OPTION "B"
N.T.S.

NOTE: TOP OF WALL SHALL NOT EXCEED 36" ABOVE EXISTING GRADE

NOTE: ALL STEEL SHALL BE ASTM GRADE 60 (MIN) WITHIN 3,000 PSI CONC.

3

DATE:01/03/13

GLEN BOE AND ASSOCIATES, INC. # 4061
5800 OVERSEAS HIGHWAY, SUITE 4, MARATHON , FL 33050
Telephone (305) 743-9121 Fax (305) 743-9197
Email: glenboe@bellsouth.net

FILL FOR RESIDENCE - PART LOT 15 & PART LOT 16
FOR SPECIAL ACQUISITIONS HOLDINGS INC
MARATHON, MONROE COUNTY, FL

CERTIFIED BY:
SEAN KIRWAN, P.E. #57506

REVISIONS:

EXHIBIT

SHEET 1 OF 1

DATE: 01/03/13

GLEN BOE AND ASSOCIATES, INC. # 4061
5800 OVERSEAS HIGHWAY, SUITE 4, MARATHON , FL 33050
Telephone (305) 743-9121 Fax (305) 743-9197
Email: glenboe@bellsouth.net

FILL FOR RESIDENCE - PART LOT 15 & PART LOT 16
FOR SPECIAL ACQUISITIONS HOLDINGS INC
MARATHON, MONROE COUNTY, FL

CERTIFIED BY:
SEAN KIRWAN, P.E. #57506

REVISIONS: