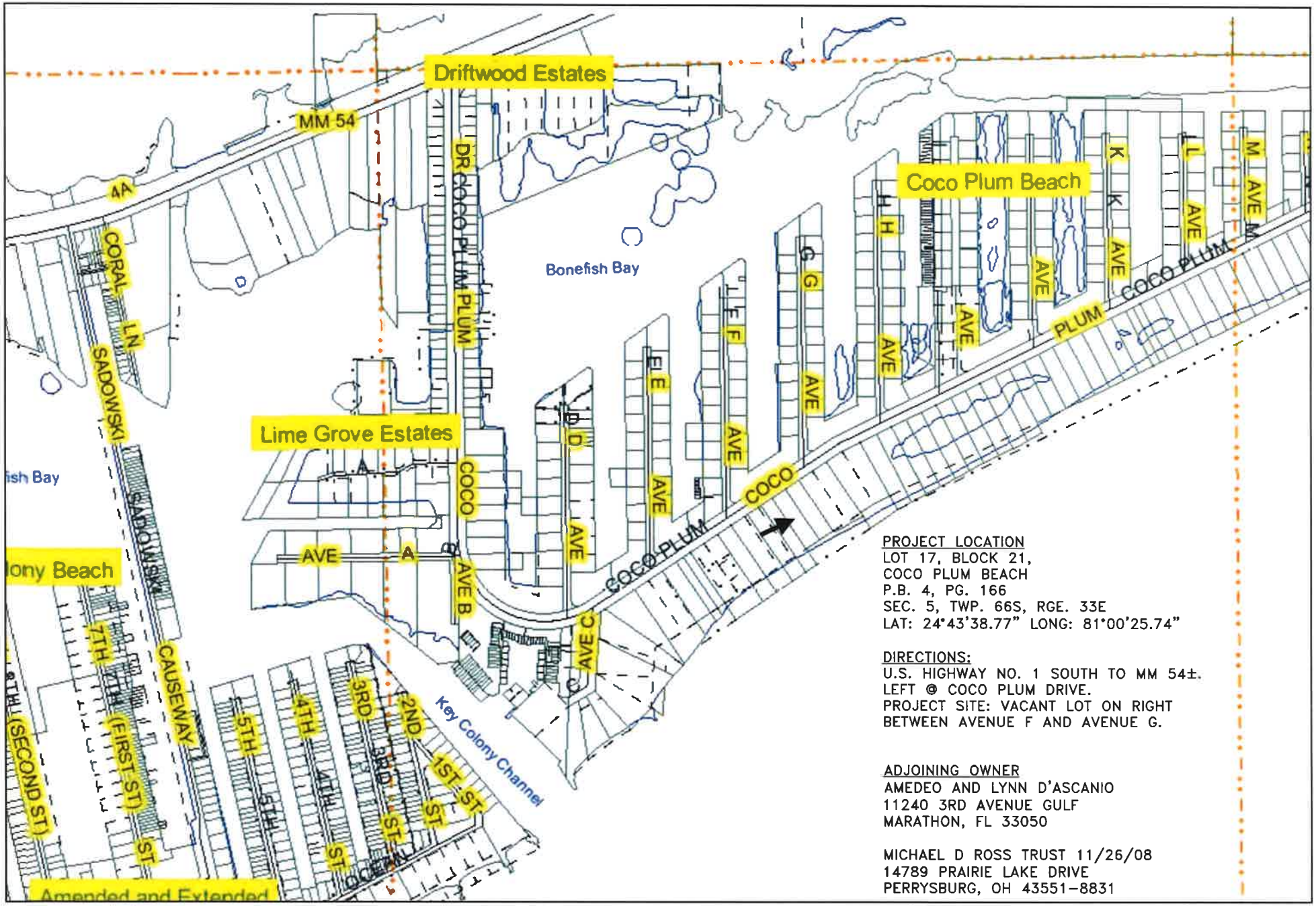

PROJECT LOCATION
LOT 17, BLOCK 21,
COCO PLUM BEACH
P.B. 4, PG. 166
SEC. 5, TWP. 66S, RGE. 33E
LAT: 24°43'38.77" LONG: 81°00'25.74"

DIRECTIONS:
U.S. HIGHWAY NO. 1 SOUTH TO MM 54±.
LEFT @ COCO PLUM DRIVE.
PROJECT SITE: VACANT LOT ON RIGHT
BETWEEN AVENUE F AND AVENUE G.

ADJOINING OWNER
AMEDEO AND LYNN D'ASCANIO
11240 3RD AVENUE GULF
MARATHON, FL 33050

MICHAEL D ROSS TRUST 11/26/08
14789 PRAIRIE LAKE DRIVE
PERRYSBURG, OH 43551-8831

SHEET 1 OF 3	1	DATE:01/02/13	GLEN BOE AND ASSOCIATES, INC. # 4061 5800 OVERSEAS HIGHWAY, SUITE 4, MARATHON , FL 33050 Telephone (305) 743-9121 Fax (305) 743-9197 Email: glenboe@bellsouth.net	FILL FOR RESIDENCES - LOT 17 SPECIAL ACQUISITIONS HOLDINGS INC MARATHON, MONROE COUNTY, FL	LOCATION & VICINITY MAP SCALE: AS SHOWN

REVISIONS:

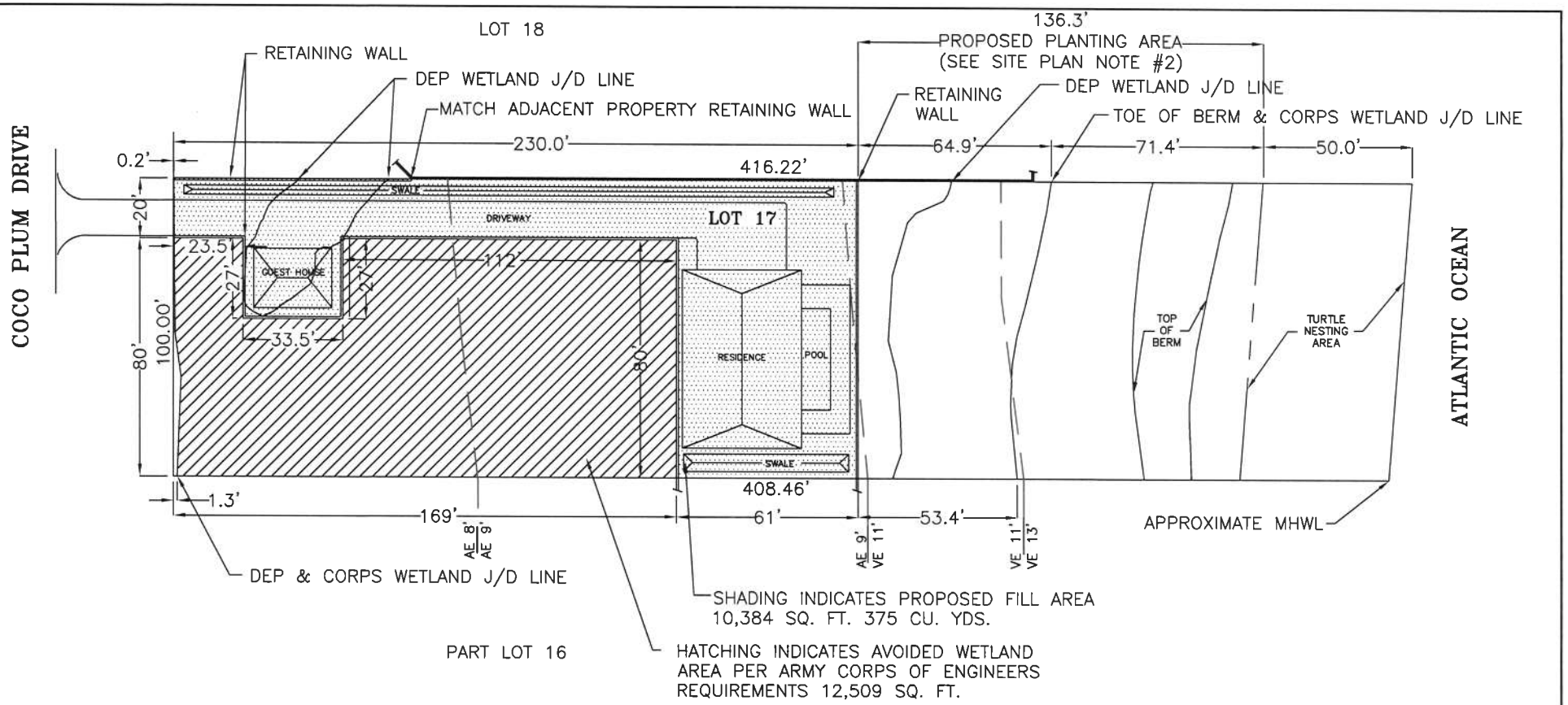

DEP WETLAND J/D AREA	= 23,198 SQ. FT.		TOTAL AREA OF DISTURBED SALT MARSH HABITAT	=	23,198 SQ. FT.
CORPS WETLAND J/D AREA	= 28,489 SQ. FT.		MARATHON COMPREHENSIVE PLAN REQUIRED OPEN SPACE (60%)	=	13,919 SQ. FT.
FILL WITHIN DEP WETLAND J/D AREA	= 9,240 SQ. FT.		ACTUAL OPEN SPACE	=	13,962 SQ. FT.
FILL WITHIN CORPS WETLAND J/D AREA	= 10,379 SQ. FT.				

NOTES:

1. FILL SHAL BE RETAINED WITH A WOOD, CONCRETE OR SIMILAR RETENTION WALL.

2. THE PROJECT SITE SHALL BE KEPT FREE OF INVASIVE EXOTIC PLANT SPECIES. THE PROPOSED PLANTING AREA IS 13,220 SQ FT. SHALL BE UTILIZED FOR BEACH/DUNE ENHANCEMENT AND PLANTED WITH PLANT SPECIES FROM THE CITY OF MARATHON'S NATIVE PLANT TABLE. PLANT SPECIES SHALL INCLUDE INK BERRY (SCAEVOLA PLUMERIA), SEA-GRAPE (COCCOLOBA UVIFERA), BAY CEDAR (SURIANA MARITIME), CORDGRASS (SPARTINA PATENS), SEVENYEAR APPLE (CASASIA CLUSIIFOLIA), CHRISTMAS BERRY (LYCIUM CAROLINIANUM), GOLDEN CREEPER (EMODEA LITTORALIS), SEA DAISY (BORRICHIA FRUTESCENS) SEA OXEYE (BORRICHIA ARBORESCENS), AND BUTTONWOOD (CANOCARPUS ERETUC).

3. THE TURTLE NESTING AREA IS LOCATED WITHIN 50' SETBACK TO THE MHWL. THE DESIGN & DEVELOPMENT OF THE RESIDENCE AND CONSTRUCTION ACTIVITIES SHALL COMPLY WITH THE FWS, FWCC AND CITY OF MARATHON SEA TURTLE PROTECTION GUIDELINES.

SITE PLAN

SCALE: 1" = 50'

N

SHEET 2 OF 3	2	DATE:01/03/13	GLEN BOE AND ASSOCIATES, INC. # 4061 5800 OVERSEAS HIGHWAY, SUITE 4, MARATHON , FL 33050 Telephone (305) 743-9121 Fax (305) 743-9197 Email: glenboe@bellsouth.net	FILL FOR RESIDENCES - LOT 17 FOR SPECIAL ACQUISITIONS HOLDINGS INC MARATHON, MONROE COUNTY, FL	CERTIFIED BY: SEAN KIRWAN, P.E. #57506

REVISIONS:

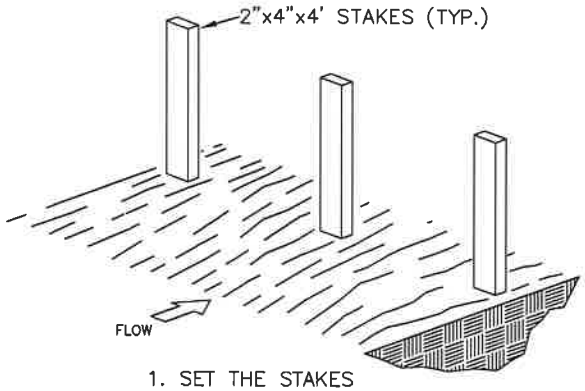

1. SET THE STAKES

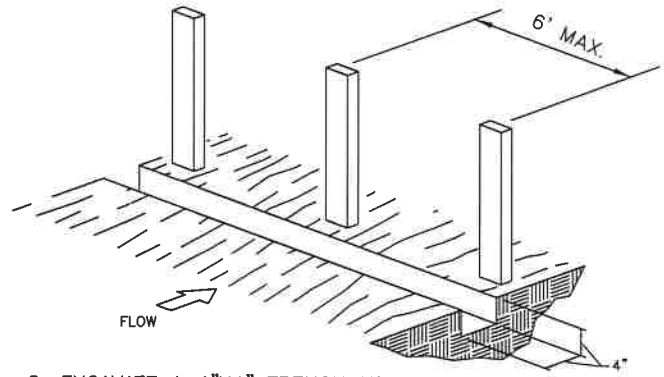

2. EXCAVATE A 4"X4" TRENCH UPSLOPE ALONG THE LINE OF STAKES.

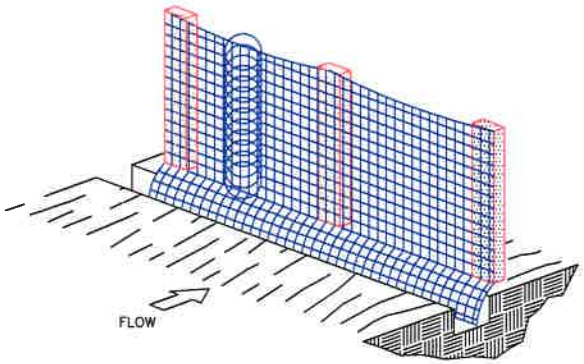

3. STAPLE FILTER MATERIAL TO STAKES AND EXTEND IT INTO THE TRENCH.

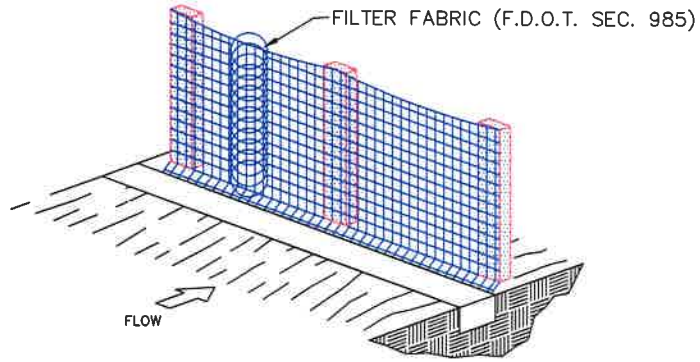

4. BACKFILL AND COMPACT THE EXCAVATED SOIL.

F.D.O.T. TYPE III FILTER FENCE

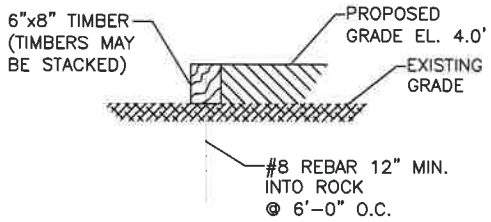

RETAINING WALL OPTION "A"
N.T.S.

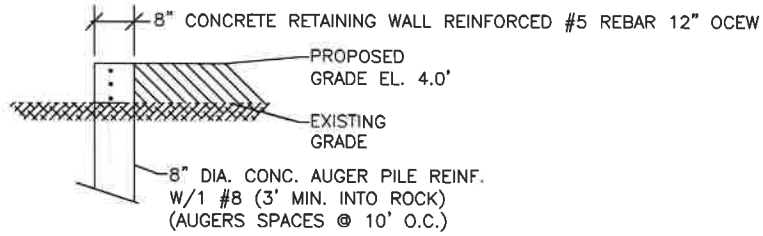

RETAINING WALL OPTION "B"
N.T.S.

NOTE: TOP OF WALL SHALL NOT EXCEED 36" ABOVE EXISTING GRADE

NOTE: ALL STEEL SHALL BE ASTM GRADE 60 (MIN) WITHIN 3,000 PSI CONC.

3

DATE:01/03/13

GLEN BOE AND ASSOCIATES, INC. # 4061
5800 OVERSEAS HIGHWAY, SUITE 4, MARATHON , FL 33050
Telephone (305) 743-9121 Fax (305) 743-9197
Email: glenboe@bellsouth.net

FILL FOR RESIDENCES - LOT 17
FOR SPECIAL ACQUISITIONS HOLDINGS INC
MARATHON, MONROE COUNTY, FL

CERTIFIED BY:
SEAN KIRWAN, P.E. #57506

REVISIONS:

EXHIBIT

SHEET 1 OF 1

DATE: 01/03/13

GLEN BOE AND ASSOCIATES, INC. # 4061
5800 OVERSEAS HIGHWAY, SUITE 4, MARATHON , FL 33050
Telephone (305) 743-9121 Fax (305) 743-9197
Email: glenboe@bellsouth.net

FILL FOR RESIDENCE - LOT 17
FOR SPECIAL ACQUISITIONS HOLDINGS INC
MARATHON, MONROE COUNTY, FL

CERTIFIED BY:
SEAN KIRWAN, P.E. #57506

REVISIONS: