# CONSTRUCTION PLANS

FOR

# ANSEL PROPERTY

PINELLAS COUNTY, FLORIDA

**JUNE, 2012**

| TOTAL WETLAND IMPACT | | |
|---|---|---|
| TYPE | AREA (SF) | AREA (AC) |
| TEMPORARY | 9,392 SF | 0.22 AC |
| PERMANT | 38,707 SF | 0.89 AC |
| | | |

| SHEET No. | DESCRIPTION |
|---|---|
| 01 | COVER SHEET |
| 02 | CONSTRUCTION NOTES |
| 03 | CONSTRUCTION DETAILS |
| 04 | SITE KEY PLAN |
| 05-08 | HORIZONTAL CONTROL PLAN |
| 09-18 | PROFILE PLAN |
| 19-32 | ACCESS DRIVE CROSS SECTION |
| 33-35 | ISLAND CROSS SECTION |

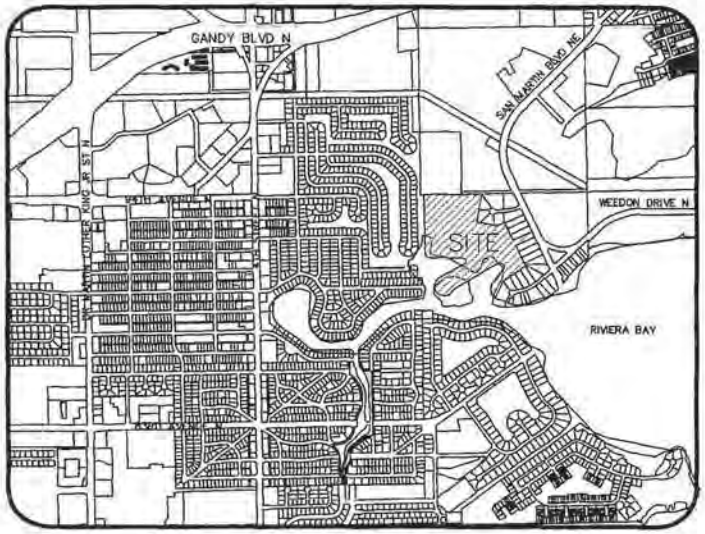


VACINITY MAP

N.T.S.

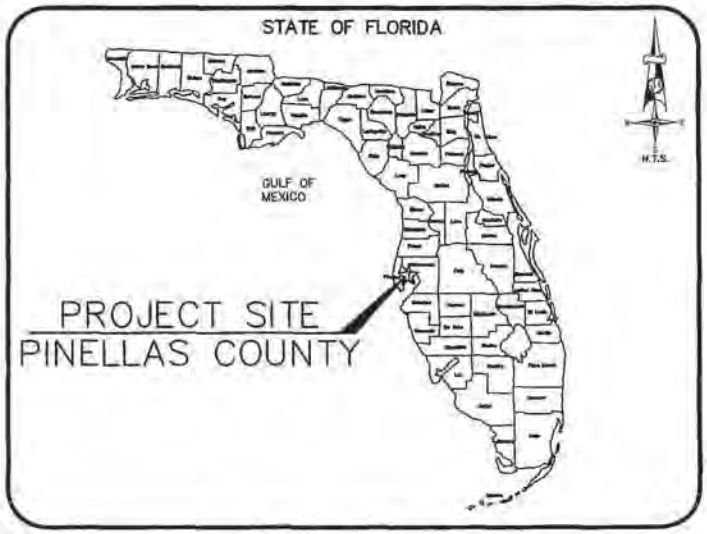


LOCATION MAP

N.T.S.

JOHN P. BASTON No. 37232

DATE

George F. Young, Inc.
Since 1919

ANSEL PROPERTY
COVER SHEET

SECTION 26 TOWNSHIP 30 S. RANGE 17E.

PREPARED FOR: NAME OF CLIENT
CLIENT STREET ADDRESS
CLIENT CITY, STATE, ZIP CODE

JOB NO. 0861003701

SHEET NO. 01

## EROSION AND SEDIMENTATION CONTROL NOTES

1. SEDIMENT BASIN AND TRAPS, PERIMETER DIKES, SEDIMENT BARRIERS AND OTHER MEASURES INTENDED TO TRAP SEDIMENT SHALL BE CONSTRUCTED AS A FIRST STEP IN ANY LAND-DISTRIBUTING ACTIVITY AND SHALL BE MADE FUNCTIONAL BEFORE LAND DISTURBANCE TAKES PLACE.
2. ALL SEDIMENT CONTROL MEASURES ARE TO BE ADJUSTED TO MEET FIELD CONDITIONS AT THE TIME OF CONSTRUCTION AND SHALL BE PUT IN TO PLACE PRIOR TO ANY GRADING OR DISTURBANCE OF EXISTING SURFACE MATERIAL ON SITE. PERIMETER SEDIMENT BARRIERS SHALL BE CONSTRUCTED TO PREVENT SEDIMENT OR TRASH FROM FLOWING OR FLOATING ON TO ADJACENT PROPERTIES.
3. PERMANENT OR TEMPORARY SOIL STABILIZATION SHALL BE APPLIED TO DENUDED AREAS WITHIN SEVEN DAYS AFTER FINAL GRADE IS REACHED ON ANY PORTION OF THE SITE. TEMPORARY SOIL STABILIZATION SHALL BE APPLIED WITHIN SEVEN DAYS TO DENUDED AREAS THAT MAY NOT BE AT FINAL GRADE BUT WILL REMAIN UNDISTURBED FOR LONGER THAN 30 DAYS. PERMANENT STABILIZATION SHALL BE APPLIED TO AREAS THAT ARE TO BE LEFT UNDISTURBED FOR MORE THAN ONE YEAR.
4. DURING CONSTRUCTION OF THE PROJECT, SOIL STOCKPILES SHALL BE STABILIZED OR PROTECTED WITH SEDIMENT TRAPPING MEASURES. THE CONTRACTOR IS RESPONSIBLE FOR THE TEMPORARY PROTECTION AND PERMANENT STABILIZATION OF ALL SOIL STOCKPILES ON SITE, AS WELL AS, SOIL INTENTIONALLY TRANSPORTED FROM THE PROJECT SITE.
5. A PERMANENT VEGETATIVE COVER SHALL BE ESTABLISHED ON DENUDED AREAS NOT OTHERWISE PERMANENTLY STABILIZED. PERMANENT VEGETATION SHALL NOT BE CONSIDERED ESTABLISHED UNTIL A GROUND COVER IS ACHIEVED THAT, IN THE OPINION OF THE ENGINEER, IS UNIFORM, MATURE ENOUGH TO SURVIVE AND WILL INHIBIT EROSION.
6. STABILIZATION MEASURES SHALL BE APPLIED TO EARTHEN STRUCTURES, SUCH AS, EMBANKMENT SLOPES, DAMS, DIKES AND DIVERSIONS IMMEDIATELY AFTER INSTALLATION.
7. SURFACE RUNOFF FROM DISTURBED AREAS THAT IS COMPRISED OF FLOW FROM DRAINAGE AREAS GREATER THAN OR EQUAL TO THREE ACRES SHALL BE CONTROLLED BY A SEDIMENT BASIN. THE SEDIMENT BASIN SHALL BE DESIGNED AND CONSTRUCTED TO ACCOMMODATE THE ANTICIPATED SEDIMENT LOADING FROM THE LAND-DISTURBING ACTIVITY. THE OUTFALL DEVICE OR SYSTEM DESIGN SHALL TAKE INTO ACCOUNT THE TOTAL DRAINAGE AREA FLOWING THROUGH THE DISTURBED AREA TO BE SERVED BY THE BASIN.
8. AFTER ANY SIGNIFICANT RAINFALL, SEDIMENT CONTROL STRUCTURES WILL BE INSPECTED FOR INTEGRITY. ANY DAMAGED DEVICES SHALL BE CORRECTED IMMEDIATELY.
9. CONCENTRATED RUNOFF SHALL NOT FLOW DOWN CUT OR FILL SLOPES UNLESS CONTAINED WITHIN AN ADEQUATE TEMPORARY OR PERMANENT CHANNEL, FLUME OR SLOPE DRAIN STRUCTURE.
10. WHENEVER WATER SEEPS FROM A SLOPE FACE, ADEQUATE DRAINAGE OR OTHER PROTECTION SHALL BE PROVIDED.
11. SEDIMENT WILL BE PREVENTED FROM ENTERING ANY STORM DRAIN SYSTEM, DITCH OR CHANNEL. ALL STORM SEWER INLETS THAT ARE MADE OPERABLE DURING CONSTRUCTION SHALL BE PROTECTED SO THAT SEDIMENT-LADEN WATER CANNOT ENTER THE CONVEYANCE SYSTEM WITHOUT FIRST BEING FILTERED OR OTHERWISE TREATED TO REMOVE SEDIMENT.
12. BEFORE TEMPORARY OR NEWLY CONSTRUCTED STORMWATER CONVEYANCE CHANNELS ARE MADE OPERATIONAL, ADEQUATE OUTLET PROTECTION AND ANY REQUIRED TEMPORARY OR PERMANENT CHANNEL LINING SHALL BE INSTALLED IN BOTH THE CONVEYANCE CHANNEL AND RECEIVING CHANNEL.
13. PERIODIC INSPECTION AND MAINTENANCE OF ALL SEDIMENT CONTROL STRUCTURES MUST BE PROVIDED TO ENSURE INTENDED PURPOSE IS ACCOMPLISHED. THE DEVELOPER, OWNER AND/OR CONTRACTOR SHALL BE CONTINUALLY RESPONSIBLE FOR ALL SEDIMENT LEAVING THE PROPERTY. SEDIMENT CONTROL MEASURES SHALL BE IN WORKING CONDITION AT THE END OF EACH WORKING DAY.
14. UNDERGROUND UTILITY LINES SHALL BE INSTALLED IN ACCORDANCE WITH THE FOLLOWING STANDARDS IN ADDITION TO OTHER APPLICABLE CRITERIA:
    A. NO MORE THAN 500 LINEAR FEET OF TRENCH MAY BE OPENED AT ONE TIME.
    B. EXCAVATED MATERIAL SHALL BE PLACED ON THE UPHILL SIDE OF TRENCHES.
    C. EFFLUENT FROM DEWATERING OPERATIONS SHALL BE FILTERED OR PASSED THROUGH AN APPROVED SEDIMENT TRAPPING DEVICE, OR BOTH, AND DISCHARGED IN A MANNER THAT DOES NOT ADVERSELY AFFECT FLOWING STREAMS OR OFF-SITE PROPERTY.
    D. RESTABILIZATION SHALL BE ACCOMPLISHED IN ACCORDANCE WITH THESE REGULATIONS.
15. WHERE CONSTRUCTION VEHICLE ACCESS ROUTES INTERSECT PAVED PUBLIC ROADS, PROVISIONS SHALL BE MADE TO MINIMIZE THE TRANSPORT OF SEDIMENT BY TRACKING ONTO THE PAVED SURFACE. WHERE SEDIMENT IS TRANSPORTED ONTO A PUBLIC ROAD SURFACE WITH CURBS AND GUTTERS, THE ROAD SHALL BE CLEANED THOROUGHLY AT THE END OF EACH DAY. SEDIMENT SHALL BE REMOVED FROM THE ROADS BY SHOVELING OR SWEEPING AND TRANSPORTED TO A SEDIMENT CONTROL DISPOSAL AREA. STREET WASHING SHALL BE ALLOWED ONLY AFTER SEDIMENT IS REMOVED IN THIS MANNER. THIS PROVISION SHALL APPLY TO INDIVIDUAL SUBDIVISION LOTS AS WELL AS TO LARGER LAND-DISTRIBUTING ACTIVITIES.
16. ALL TEMPORARY EROSION AND SEDIMENT CONTROL MEASURES SHALL BE REMOVED WITHIN 30 DAYS AFTER FINAL SITE STABILIZATION OR AFTER THE TEMPORARY MEASURES ARE NO LONGER NEEDED, IN THE OPINION OF THE ENGINEER. DISTURBED SOIL AREAS RESULTING FROM THE DISPOSITION OF TEMPORARY MEASURES SHALL BE PERMANENTLY STABILIZED TO PREVENT FURTHER EROSION AND SEDIMENTATION.
17. PROPERTIES AND WATERWAYS DOWNSTREAM FROM CONSTRUCTION SITE SHALL BE PROTECTED FROM SEDIMENT DISPOSITION AND EROSION.
18. PHASED PROJECTS SHOULD BE CLEARED IN CONJUNCTION WITH CONSTRUCTION OF EACH PHASE.
19. EROSION CONTROL DESIGN AND CONSTRUCTION SHALL FOLLOW THE REQUIREMENTS IN INDEX NOS. 101, 102 AND 103 OF FDOT DESIGN STANDARDS FOR DESIGN, CONSTRUCTION, MAINTENANCE AND UTILITY OPERATIONS ON THE STATE HIGHWAY SYSTEM (2010).
20. THE ENGINEER MAY APPROVE MODIFICATIONS OR ALTER PLANS TO THESE EROSION CONTROL CRITERIA DUE TO SITE SPECIFIC CONDITIONS.
21. THE CONTRACTOR SHALL USE A WATER TRUCK OR OTHER SUITABLE MEANS TO CONTROL DUST.
22. THE ENGINEER OF RECORD IS TO BE NOTIFIED IMMEDIATELY IF A SINK HOLE IS ENCOUNTERED DURING CONSTRUCTION.

## CLEARING AND DEMOLITION NOTES:

1. INSTALL SILT FENCE PRIOR TO SITE CLEARING AND DEMOLITION OR NEW SITE CONSTRUCTION. INSTALL SILT FENCE PER FDOT INDEX 102. PROVIDE TOE-IN FOR EITHER OPTION. MAINTAIN FENCE IN WORKING ORDER THROUGHOUT THE CONSTRUCTION PHASE.
2. ALL CONSTRUCTION WITHIN THE RIGHT-OF-WAY AND EASEMENTS SHALL CONFORM TO THE METHODS, STANDARDS AND SPECIFICATIONS OF THE CITY OF ST. PETERSBURG, AND ALL APPLICABLE AGENCIES.
3. CONTRACTOR TO ATTAIN APPROPRIATE WORK PERMITS PRIOR TO BEGINNING CONSTRUCTION.
4. ALL CLEARING, DEMOLITION, EXCAVATION, BACKFILLING, STOCK PILING, ETC. SHALL CONFORM TO THE RECOMMENDATIONS OF THE GEOTECHNICAL ENGINEER, THE OWNER'S REPRESENTATIVE, AND/OR THE PERMITTING AGENCIES.
5. ABOVE GROUND AND UNDERGROUND UTILITIES MAY BE IN THE AREA OF THIS PROJECT. CALL "SUNSHINE STATE ONE CALL OF FLORIDA AT 1-800-432-4770 OR 811 AND THE UTILITY PROVIDER(S) 48 HOURS PRIOR TO ANY CLEARING OR CONSTRUCTION ACTIVITIES ON SITE.
6. ALL EXISTING UTILITIES SHOWN ARE TO BE CONSIDERED APPROXIMATE. CONTRACTOR IS RESPONSIBLE FOR THE VERIFICATION OF ALL EXISTING UTILITIES SHOWN AND COORDINATE WITH UTILITY COMPANIES FOR THE REMOVAL OR RELOCATION OF THESE FACILITIES.
7. ALL DISTURBED AREAS TO BE RESTORED TO ORIGINAL STATE OR BETTER.
8. CONTRACTOR SHALL BE RESPONSIBLE FOR MAINTENANCE, OPERATION AND MONITORING OF STORMWATER POLLUTION PREVENTION PLAN FOR EROSION CONTROL AND PROTECTION OF STORM SEWER SYSTEMS.
9. CONTRACTOR TO CLEAR, GRUB AND REMOVE ALL DEBRIS ON SITE AND ALL AREAS OF THE RIGHT-OF-WAY AS NECESSARY TO COMPLETE WORK.
10. CONTRACTOR TO COORDINATE WITH OWNER'S REPRESENTATIVE REGARDING ALL EXISTING UTILITIES AND APPURTENANCES TO BE REMOVED BEFORE WORK BEGINS. THESE ITEMS MAY BE USED IN THE NEW FACILITY AT THE OWNER'S REQUEST.
11. ALL CONSTRUCTION MUST CONFORM TO THE MINIMUM STANDARDS SET FORTH IN THE CITY OF ST. PETERSBURG MUNICIPAL CODE AND ALL APPLICABLE AGENCIES.
12. CONTRACTOR TO VERIFY ALL PLAN DIMENSIONS AND SITE CONDITIONS, NOTIFY OWNER'S REPRESENTATIVE OF ANY DISCREPANCIES BETWEEN SITE CONDITIONS AND INFORMATION SHOWN ON DRAWINGS PRIOR TO COMMENCING WORK.
13. CONTRACTOR IS RESPONSIBLE FOR THE DISPOSAL OF ALL UNSUITABLE MATERIALS ON-SITE TO A PERMITTED AND APPROVED AREA. MATERIAL TO BE MOVED IN ACCORDANCE WITH INSTRUCTION OF OWNER'S REPRESENTATIVE.
14. THE CONTRACTOR SHALL STOCK PILE TOPSOIL AND CONSTRUCTION MATERIALS IN AREAS DESIGNATED BY THE OWNER AND APPROVED BY THE ENGINEER. THE CONTRACTOR SHALL FURNISH ALL FILL REQUIRED IF NOT OTHERWISE APPROVED BY OWNER.
15. ALL MATERIAL FOR FILL UNDER BUILDING, PAVING, OR LANDSCAPING AREAS, IS TO BE SPREAD AND COMPACTED IN LOCATIONS DESIGNATED BY THE OWNER'S REPRESENTATIVE.
16. ON SITE BURNING (IF NEEDED): CONTRACTOR TO OBTAIN PERMISSION AND PERMIT FROM THE LOCAL FIRE DISTRICT AS REQUIRED TO BURN CLEARING DEBRIS ON SITE PRIOR TO BEGINNING CONSTRUCTION. THE CONTRACTOR IS TO FOLLOW THE GUIDELINES OF THE LOCAL FIRE DISTRICT. ALL CLEARED DEBRIS TO BE BURNED SHALL BE DONE IN DESIGNATED LOCATIONS AND/OR AS DIRECTED BY THE OWNER OR THE OWNER'S REPRESENTATIVE.

George F. Young, Inc.
1105 SOUTH MAIN STREET GAINESVILLE, FLORIDA 32601
PHONE (352) 378-1444 FAX (352) 372-5502
ENGINEERING CERTIFICATE OF AUTHORIZATION NUMBER 21
ARCHITECTURE · ENGINEERING · ENVIRONMENTAL · LANDSCAPE PLANNING · SURVEYING · UTILITIES
GAINESVILLE · LAKEWOOD RANCH · ORLANDO · PALM BEACH GARDENS · ST. PETERSBURG · TAMPA · YEMASSEE
Since 1919

ANSEL PROPERTY
CONSTRUCTION NOTES
SECTION 24 TOWNSHIP 30 S. RANGE 17 E
PREPARED FOR: NAME OF CLIENT
CLIENT STREET ADDRESS
CLIENT CITY STATE, ZIP CODE

JOB NO.
0861003701

SHEET NO.
02

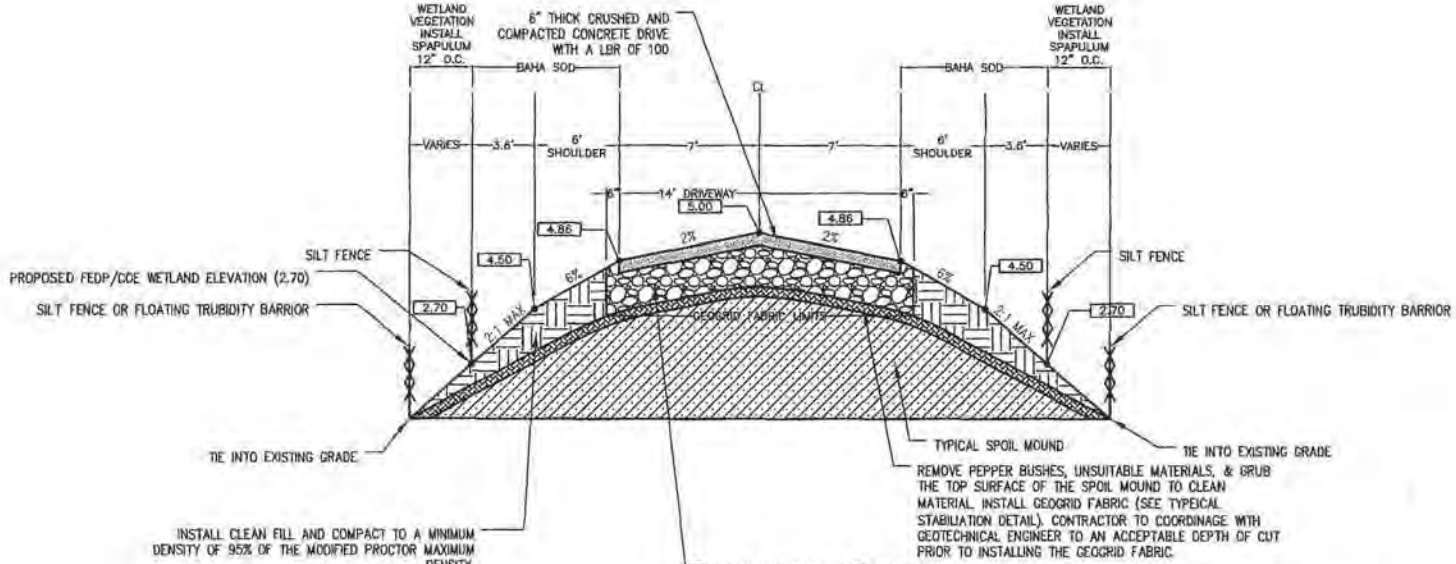


TYPICAL DRIVEWAY CROSS SECTION

N.T.S.

SEQUENCE OF CONSTRUCTION NOTES:

1. CUT PEPPER TREES OFF OF SPOIL MOUNDS.
2. INSTALL SILT FENCE AND FLOATING TURBIDITY BARRIERS. TURBIDITY BARRIERS MUST BE INSTALLED AT ALL DITCH CROSSINGS.
3. CLEAR AND GRUB THE AREA WITHIN THE SILT FENCE/FLOATING TURBIDITY BARRIERS.
4. FILL OR EXCAVATE AS NEEDED TO CONSTRUCT THE DRIVE.
5. INSTALL UTILITIES AND CULVERTS.
6. INSTALL THE 6" THICK CRUSHED CONCRETE DRVIE SURFACE.
7. INSTALL SOD AND WETLAND PLANTINGS.

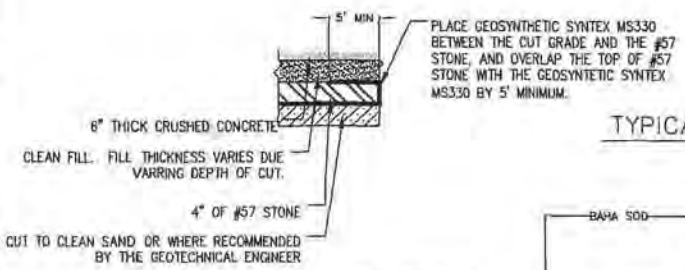


TYPICAL STABILIZATION DETAIL

N.T.S.

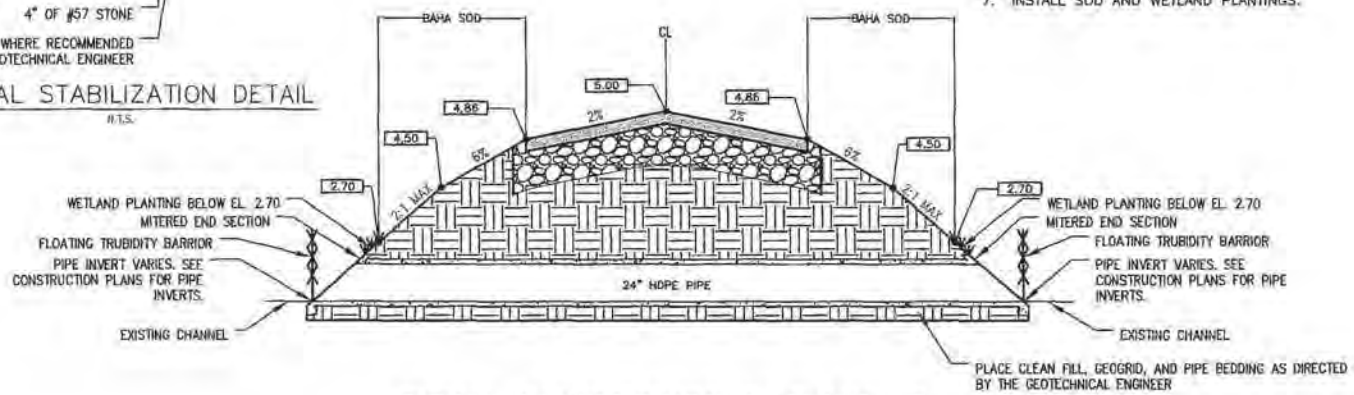


TYPICAL CULVERT CROSSING AT CAHNNEL

N.T.S.

George F. Young, Inc.
1905 SOUTH MAIN STREET GAINESVILLE, FLORIDA 32601
PHONE (352) 373-1444 FAX (352) 372-2502
ENGINEERING CERTIFICATE OF AUTHORIZATION NUMBER 21
ARCHITECTURE · ENGINEERING · ENVIRONMENTAL · LANDSCAPE PLANNING · SURVEYING · UTILITIES
GAINESVILLE · LAKEWOOD RANCH · ORLANDO · PALM BEACH GARDENS · ST. PETERSBURG · TAMPA · VENICE
Since 1919

ANSEL PROPERTY
CONSTRUCTION DETAILS
SECTION 20 TOWNSHIP 30 S. RANGE 17 E.
PREPARED FOR:
NAME OF CLIENT
CLIENT STREET ADDRESS
CLIENT CITY, STATE, ZIP CODE

JOB NO.
0861003701
SHEET NO.
03

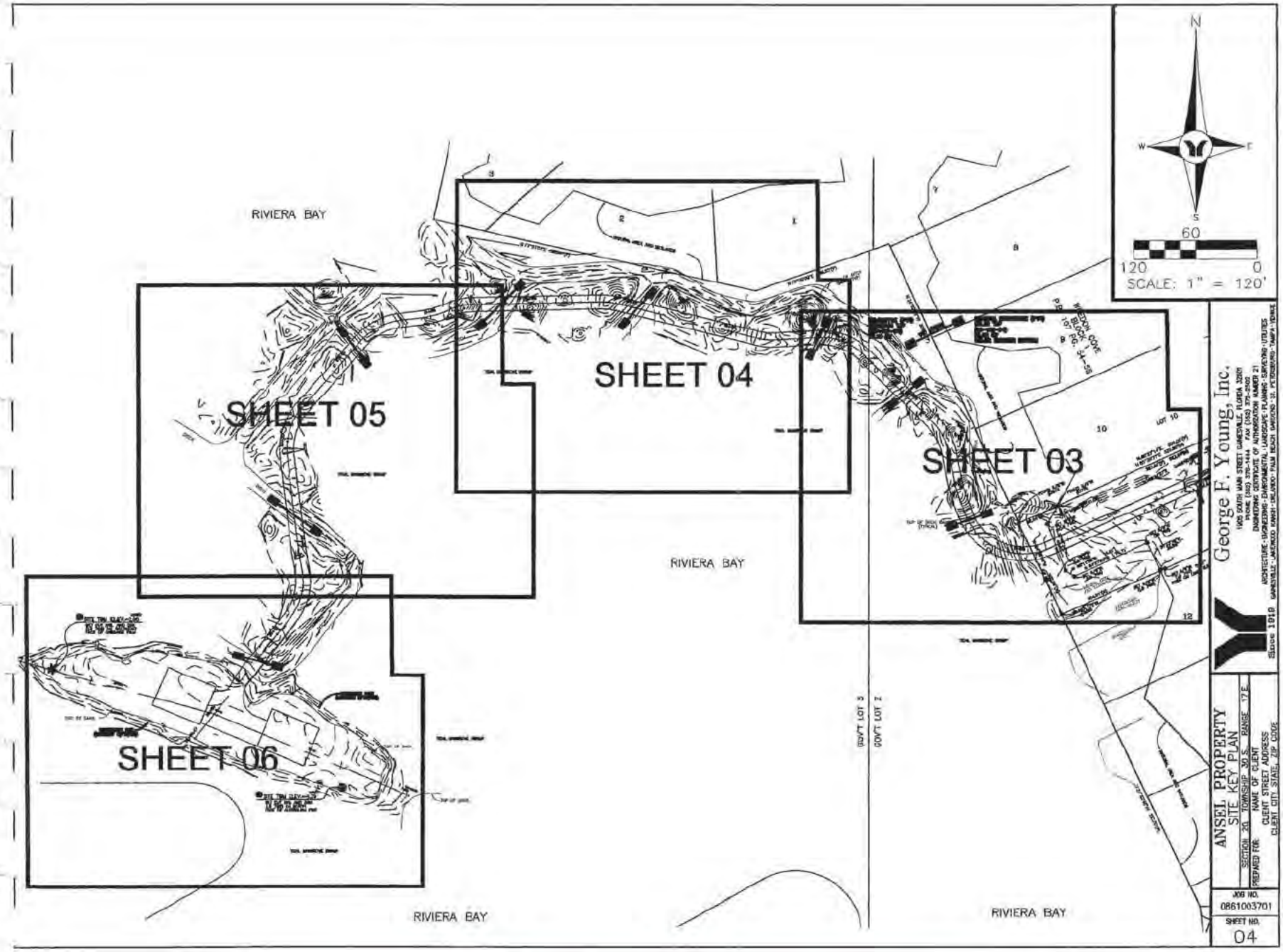
RIVIERA BAY
SHEET 05
SHEET 04
SHEET 03
SHEET 06
RIVIERA BAY
RIVIERA BAY
RIVIERA BAY
GOV'T LOT 3
GOV'T LOT 2
N
W
E
S
60
120
0
SCALE: 1" = 120'
George F. Young, Inc.
ANSEL PROPERTY
SITE KEY PLAN
SECTION: 20 TOWNSHIP: 30 S. RANGE: 17 E.
PREPARED FOR: NAME OF CLIENT
CLIENT STREET ADDRESS
CLIENT CITY, STATE, ZIP CODE
JOB NO.
0861003701
SHEET NO.
04

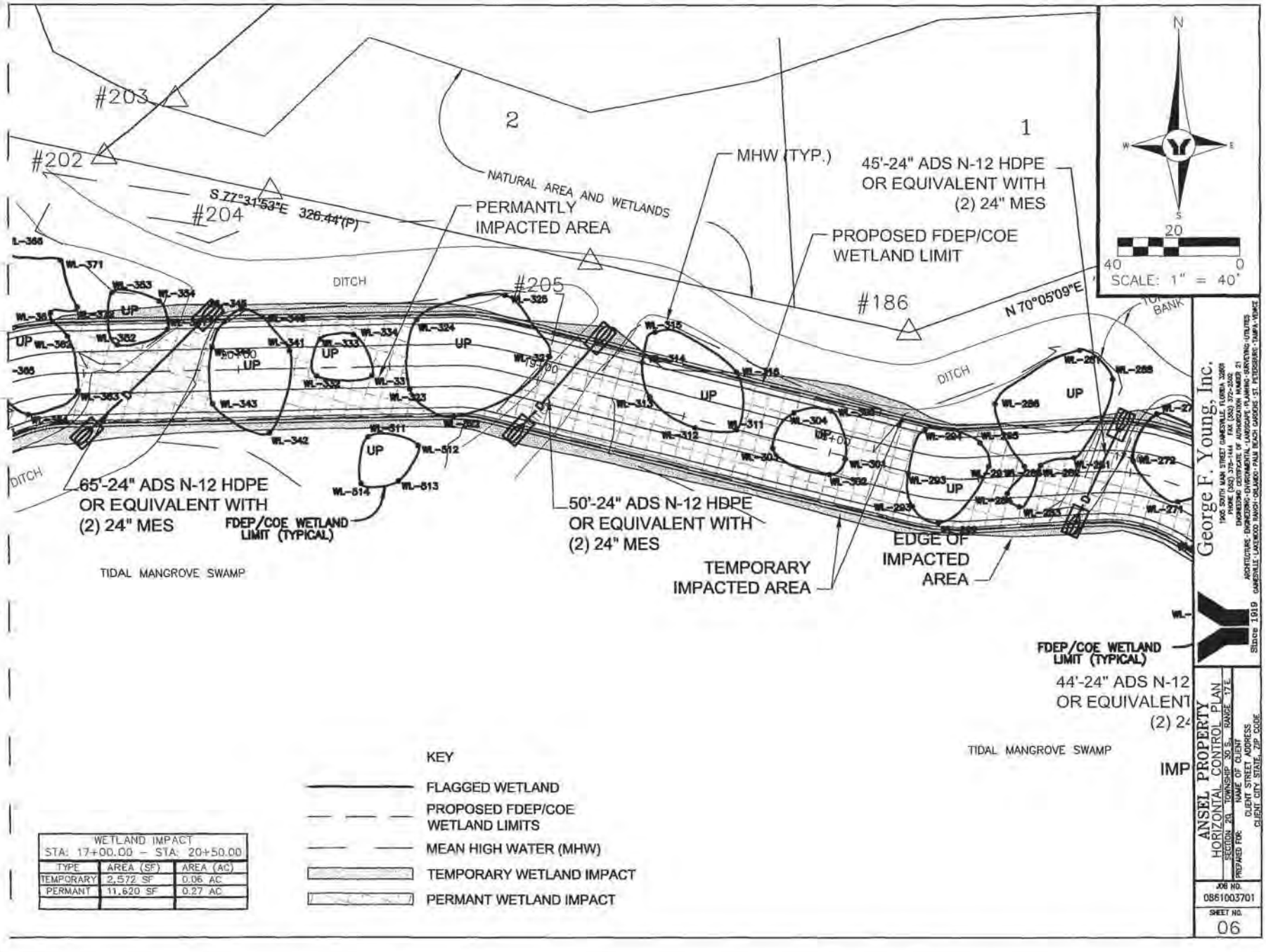


| WETLAND IMPACT STA: 17+00.00 – STA: 20+50.00 | | |
|---|---|---|
| TYPE | AREA (SF) | AREA (AC) |
| TEMPORARY | 2,572 SF | 0.06 AC |
| PERMANT | 11,620 SF | 0.27 AC |

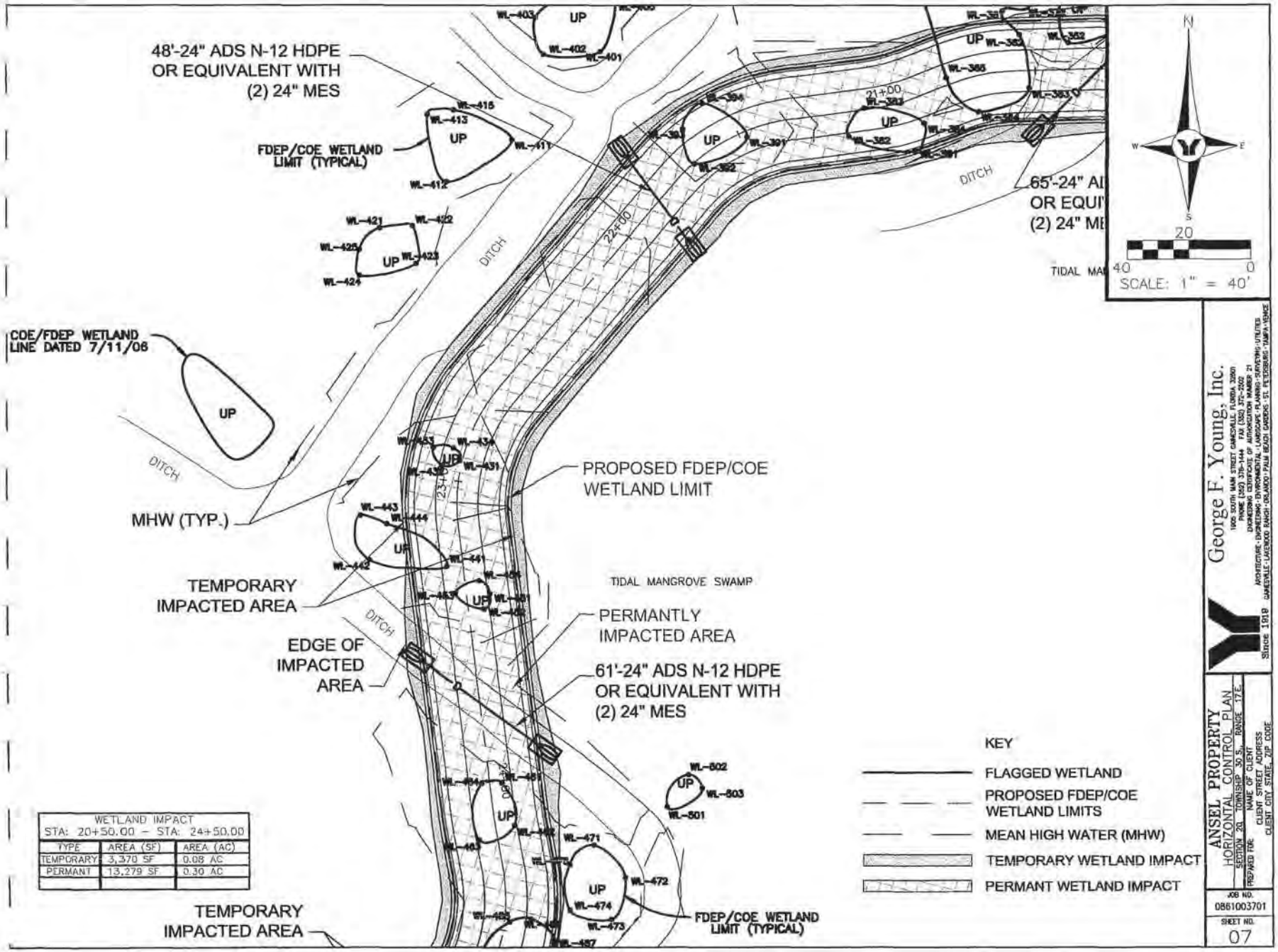


| WETLAND IMPACT STA: 20+50.00 – STA: 24+50.00 | | |
|---|---|---|
| TYPE | AREA (SF) | AREA (AC) |
| TEMPORARY | 3,370 SF | 0.08 AC |
| PERMANT | 13,279 SF | 0.30 AC |
| | | |

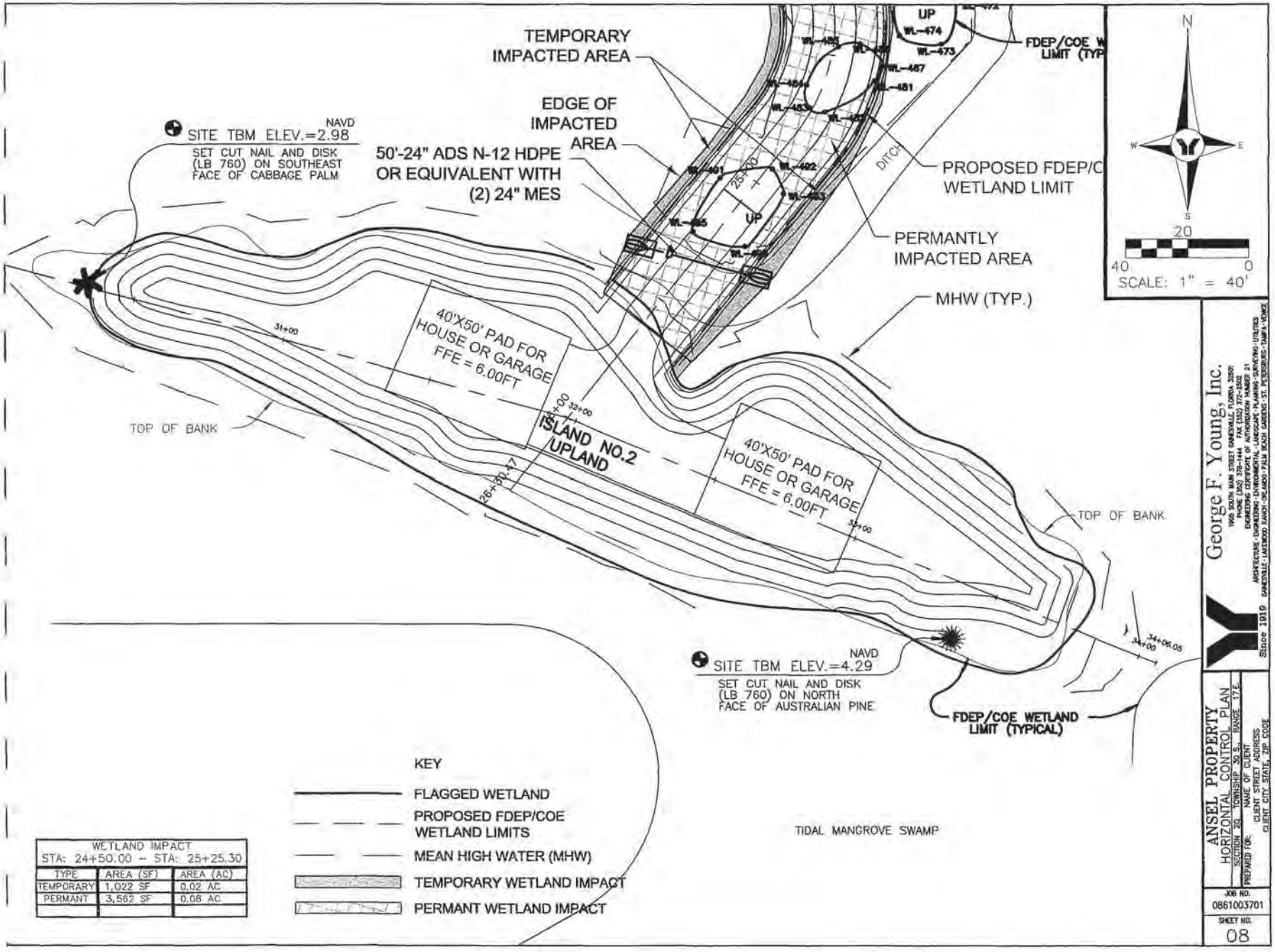
TEMPORARY IMPACTED AREA
EDGE OF IMPACTED AREA
50'-24" ADS N-12 HDPE OR EQUIVALENT WITH (2) 24" MES
SITE TBM ELEV.=2.98 NAVD
SET CUT NAIL AND DISK (LB 760) ON SOUTHEAST FACE OF CABBAGE PALM
FDEP/COE WETLAND LIMIT (TYP
PROPOSED FDEP/C WETLAND LIMIT
PERMANTLY IMPACTED AREA
MHW (TYP.)
DITCH
UP
WL-474
WL-473
WL-457
WL-481
WL-461
WL-462
WL-465
25+00
31+00
32+00
33+00
26+50.17
34+00
34+06.05
40'X50' PAD FOR HOUSE OR GARAGE FFE = 6.00FT
ISLAND NO.2 UPLAND
TOP OF BANK
SITE TBM ELEV.=4.29 NAVD
SET CUT NAIL AND DISK (LB 760) ON NORTH FACE OF AUSTRALIAN PINE
FDEP/COE WETLAND LIMIT (TYPICAL)
TIDAL MANGROVE SWAMP
N
W
E
S
20
40
0
SCALE: 1" = 40'
KEY
FLAGGED WETLAND
PROPOSED FDEP/COE WETLAND LIMITS
MEAN HIGH WATER (MHW)
TEMPORARY WETLAND IMPACT
PERMANT WETLAND IMPACT
WETLAND IMPACT
STA: 24+50.00 – STA: 25+25.30
TYPE | AREA (SF) | AREA (AC)
TEMPORARY | 1,022 SF | 0.02 AC
PERMANT | 3,562 SF | 0.08 AC
George F. Young, Inc.
Since 1919
ANSEL PROPERTY
HORIZONTAL CONTROL PLAN
SECTION 20 TOWNSHIP 30 S. RANGE 17 E.
PREPARED FOR:
NAME OF CLIENT
CLIENT STREET ADDRESS
CLIENT CITY STATE, ZIP CODE
JOB NO.
0861003701
SHEET NO.
08

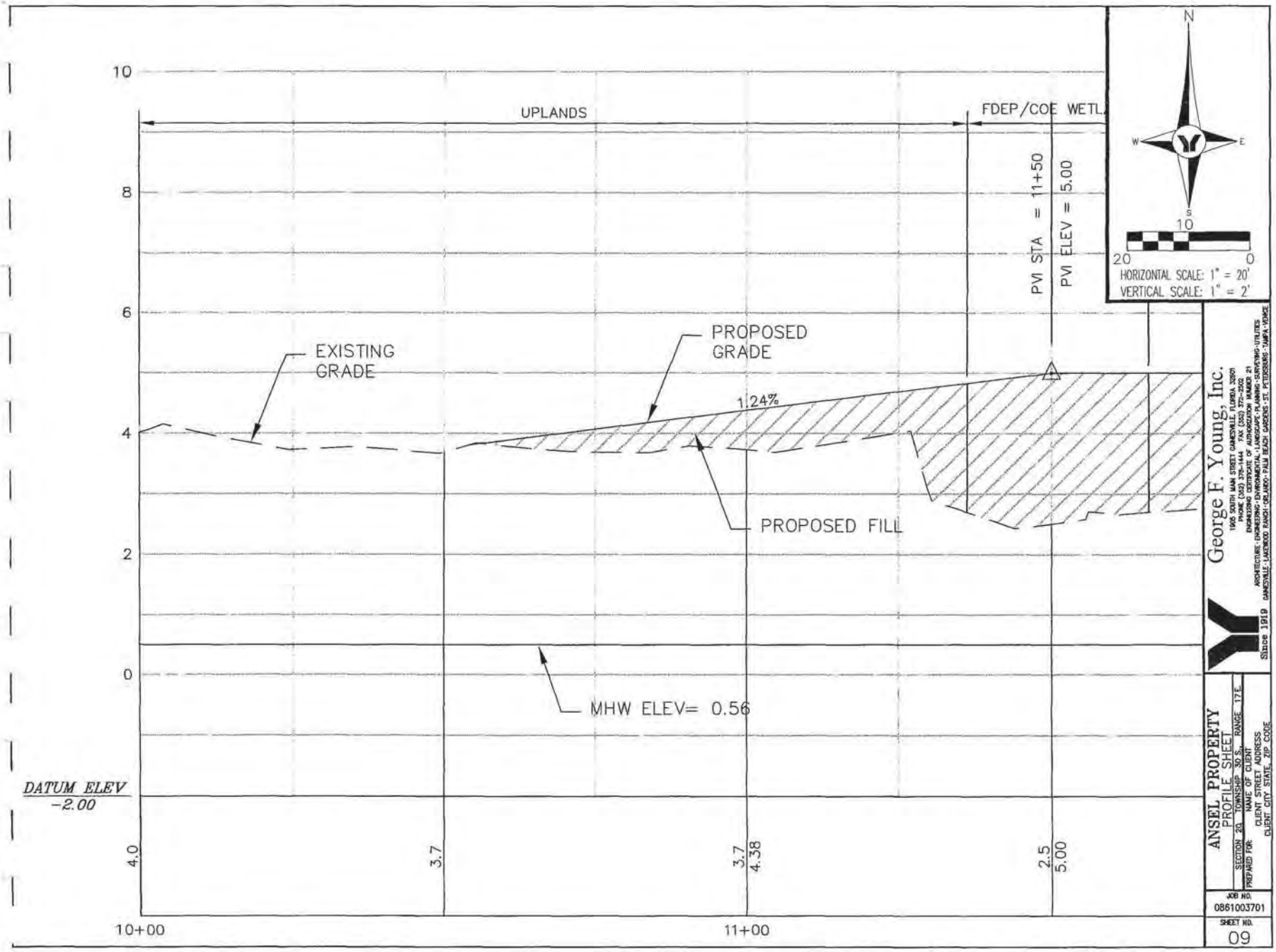
10
8
6
4
2
0
UPLANDS
FDEP/COE WETL.
PVI STA = 11+50
PVI ELEV = 5.00
EXISTING GRADE
PROPOSED GRADE
1.24%
PROPOSED FILL
MHW ELEV= 0.56
DATUM ELEV
-2.00
4.0
3.7
3.7
4.38
2.5
5.00
10+00
11+00
N
W
E
S
10
20
0
HORIZONTAL SCALE: 1" = 20'
VERTICAL SCALE: 1" = 2'
George F. Young, Inc.
1905 SOUTH MAIN STREET GAINESVILLE, FLORIDA 32601
PHONE (352) 378-1444 FAX (352) 372-2502
ENGINEERING CERTIFICATE OF AUTHORIZATION NUMBER 21
ARCHITECTURE · ENGINEERING · ENVIRONMENTAL · LANDSCAPE PLANNING · SURVEYING · UTILITIES
GAINESVILLE · LAKEWOOD RANCH · ORLANDO · PALM BEACH GARDENS · ST. PETERSBURG · TAMPA · VENICE
SINCE 1919
ANSEL PROPERTY
PROFILE SHEET
SECTION 20 TOWNSHIP 30 S. RANGE 17E
PREPARED FOR:
NAME OF CLIENT
CLIENT STREET ADDRESS
CLIENT CITY STATE, ZIP CODE
JOB NO.
0861003701
SHEET NO.
09

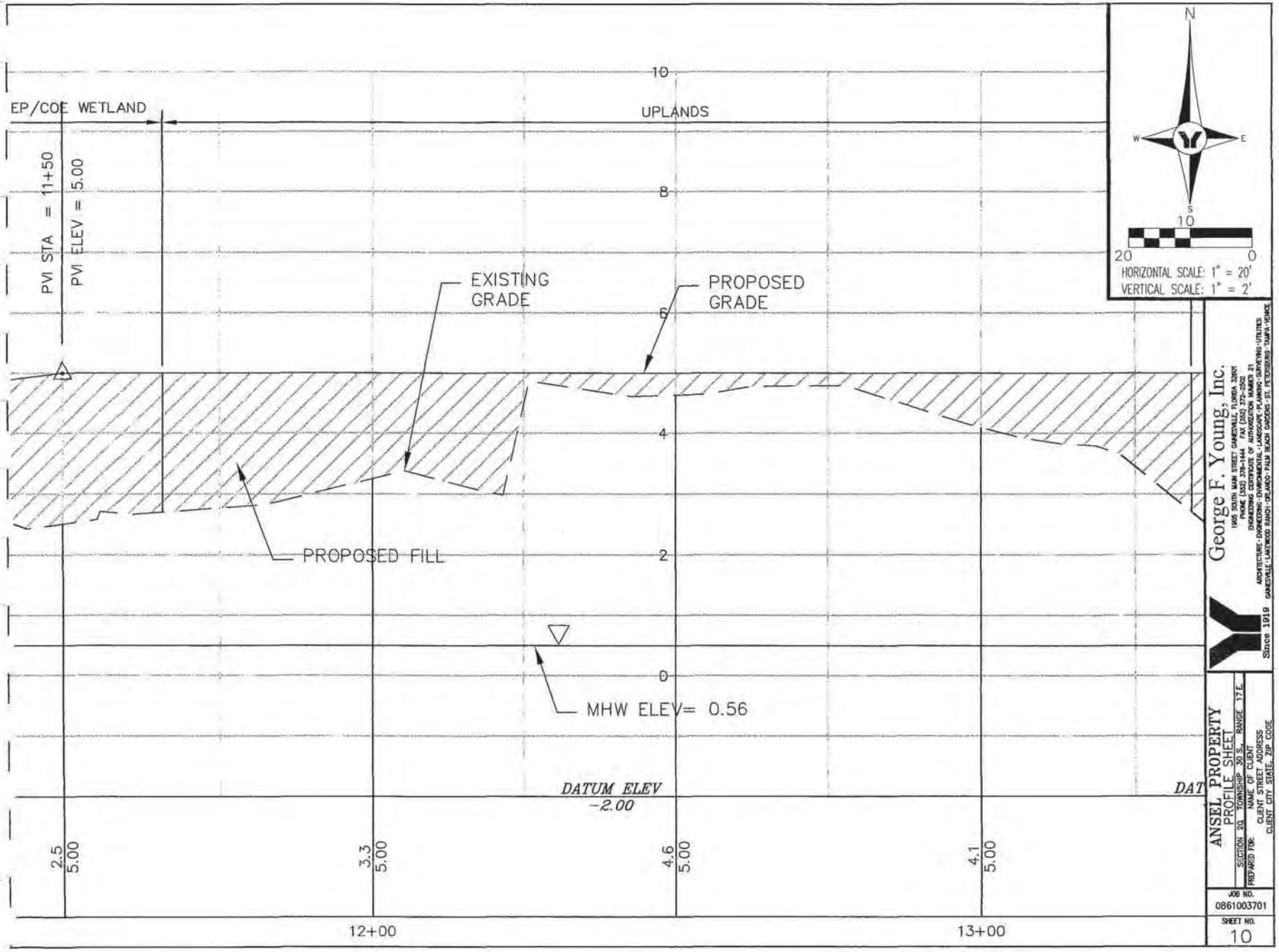
EP/COE WETLAND
UPLANDS
PVI STA = 11+50
PVI ELEV = 5.00
EXISTING GRADE
PROPOSED GRADE
PROPOSED FILL
MHW ELEV= 0.56
DATUM ELEV
-2.00
10
8
6
4
2
0
2.5
5.00
3.3
5.00
4.6
5.00
4.1
5.00
12+00
13+00
N
W
E
S
10
20
0
HORIZONTAL SCALE: 1" = 20'
VERTICAL SCALE: 1" = 2'
George F. Young, Inc.
1905 SOUTH MAIN STREET GAINESVILLE, FLORIDA 32601
PHONE (352) 376-1444 FAX (352) 372-2502
ENGINEERING CERTIFICATE OF AUTHORIZATION NUMBER 21
ARCHITECTURE-ENGINEERING-ENVIRONMENTAL-LANDSCAPE-PLANNING-SURVEYING-UTILITIES
GAINESVILLE-LAKELAND-ORLANDO-PALM BEACH GARDENS-ST. PETERSBURG-TAMPA-VENICE
Since 1919
ANSEL PROPERTY
PROFILE SHEET
SECTION 20 TOWNSHIP 30 S. RANGE 17 E.
PREPARED FOR:
NAME OF CLIENT
CLIENT STREET ADDRESS
CLIENT CITY STATE, ZIP CODE
JOB NO.
0861003701
SHEET NO.
10

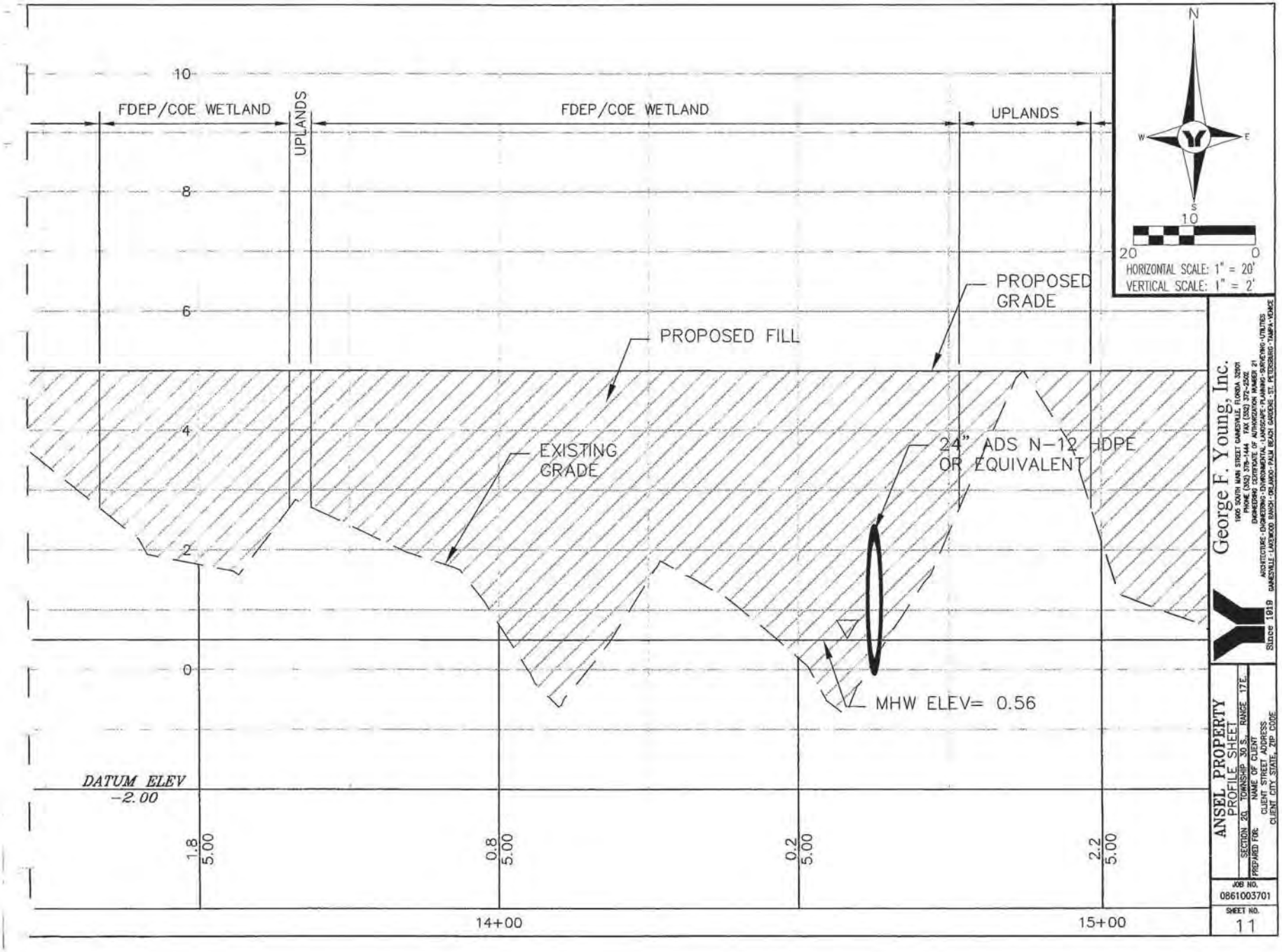
10
8
6
4
2
0
FDEP/COE WETLAND
UPLANDS
FDEP/COE WETLAND
UPLANDS
PROPOSED GRADE
PROPOSED FILL
EXISTING GRADE
24" ADS N-12 HDPE OR EQUIVALENT
MHW ELEV= 0.56
DATUM ELEV -2.00
1.8
5.00
0.8
5.00
0.2
5.00
2.2
5.00
14+00
15+00
N
W
E
S
10
20
0
HORIZONTAL SCALE: 1" = 20'
VERTICAL SCALE: 1" = 2'
George F. Young, Inc.
1105 SOUTH MAIN STREET GAINESVILLE, FLORIDA 32601
PHONE (352) 376-1444 FAX (352) 372-2502
ENGINEERING CERTIFICATE OF AUTHORIZATION NUMBER 21
ARCHITECTURE · ENGINEERING · ENVIRONMENTAL · LANDSCAPE · PLANNING · SURVEYING · UTILITIES
GAINESVILLE · LAKEWOOD RANCH · ORLANDO · PALM BEACH GARDENS · ST. PETERSBURG · TAMPA · VENICE
Since 1919
ANSEL PROPERTY
PROFILE SHEET
SECTION 20 TOWNSHIP 30 S. RANGE 17 E.
PREPARED FOR:
NAME OF CLIENT
CLIENT STREET ADDRESS
CLIENT CITY STATE, ZIP CODE
JOB NO.
0861003701
SHEET NO.
11

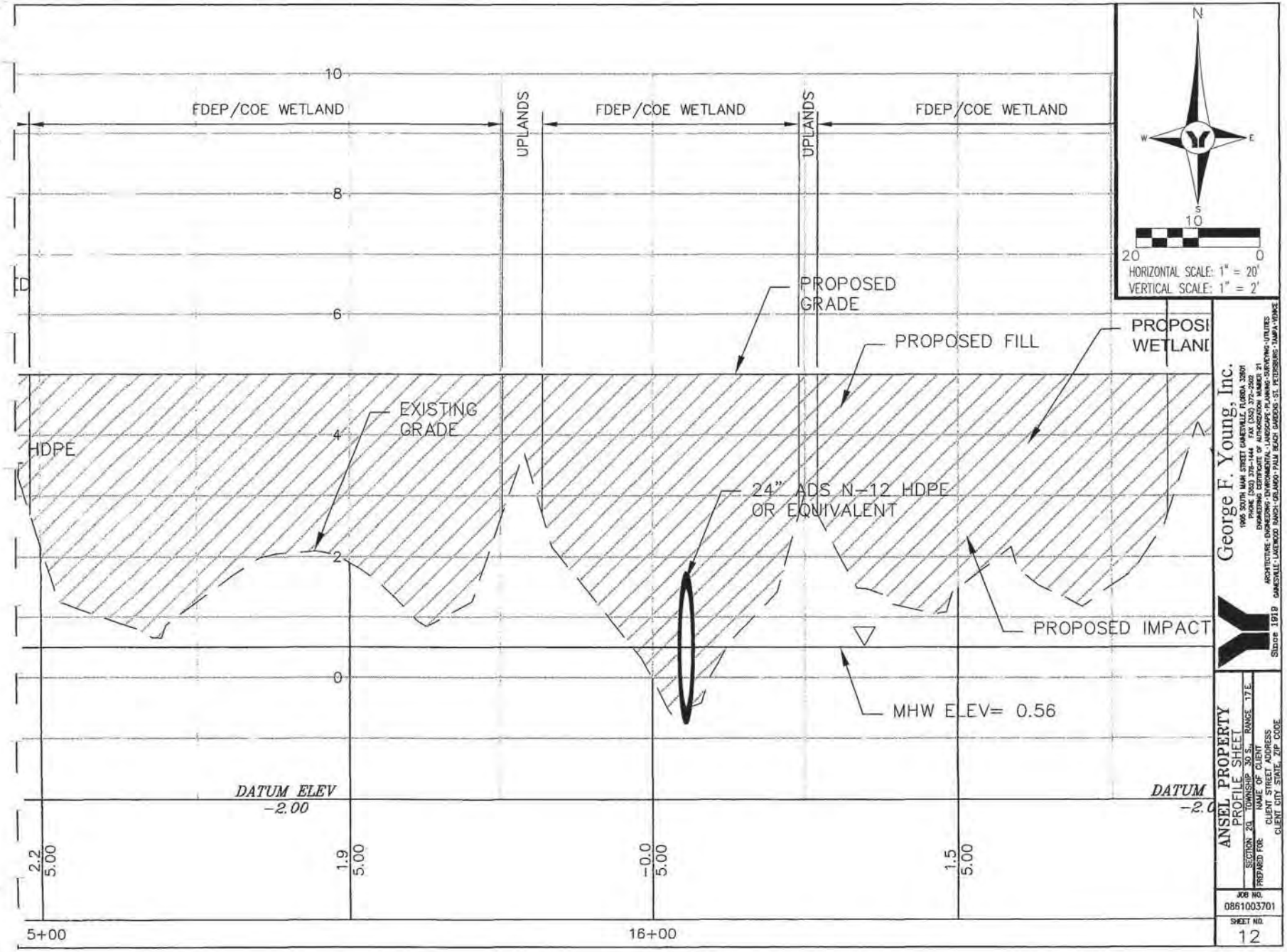
FDEP/COE WETLAND
UPLANDS
FDEP/COE WETLAND
UPLANDS
FDEP/COE WETLAND
10
8
6
4
2
0
HDPE
PROPOSED GRADE
PROPOSED FILL
PROPOSI
WETLANI
EXISTING GRADE
24" ADS N-12 HDPE OR EQUIVALENT
PROPOSED IMPACT
MHW ELEV= 0.56
DATUM ELEV -2.00
DATUM -2.0
2.2 5.00
1.9 5.00
-0.0 5.00
1.5 5.00
5+00
16+00
N
W
E
S
10
20
0
HORIZONTAL SCALE: 1" = 20'
VERTICAL SCALE: 1" = 2'
George F. Young, Inc.
1905 SOUTH MAIN STREET GAINESVILLE, FLORIDA 32601
PHONE (352) 376-1444 FAX (352) 372-2502
ENGINEERING CERTIFICATE OF AUTHORIZATION NUMBER: 21
ARCHITECTURE-ENGINEERING-ENVIRONMENTAL-LANDSCAPE-PLANNING-SURVEYING-UTILITIES
GAINESVILLE-LAKEWOOD RANCH-ORLANDO-PALM BEACH GARDENS-ST. PETERSBURG-TAMPA-VENICE
Since 1919
ANSEL PROPERTY
PROFILE SHEET
SECTION 20 TOWNSHIP 30 S. RANGE 17 E.
PREPARED FOR:
NAME OF CLIENT
CLIENT STREET ADDRESS
CLIENT CITY STATE, ZIP CODE
JOB NO.
0861003701
SHEET NO.
12

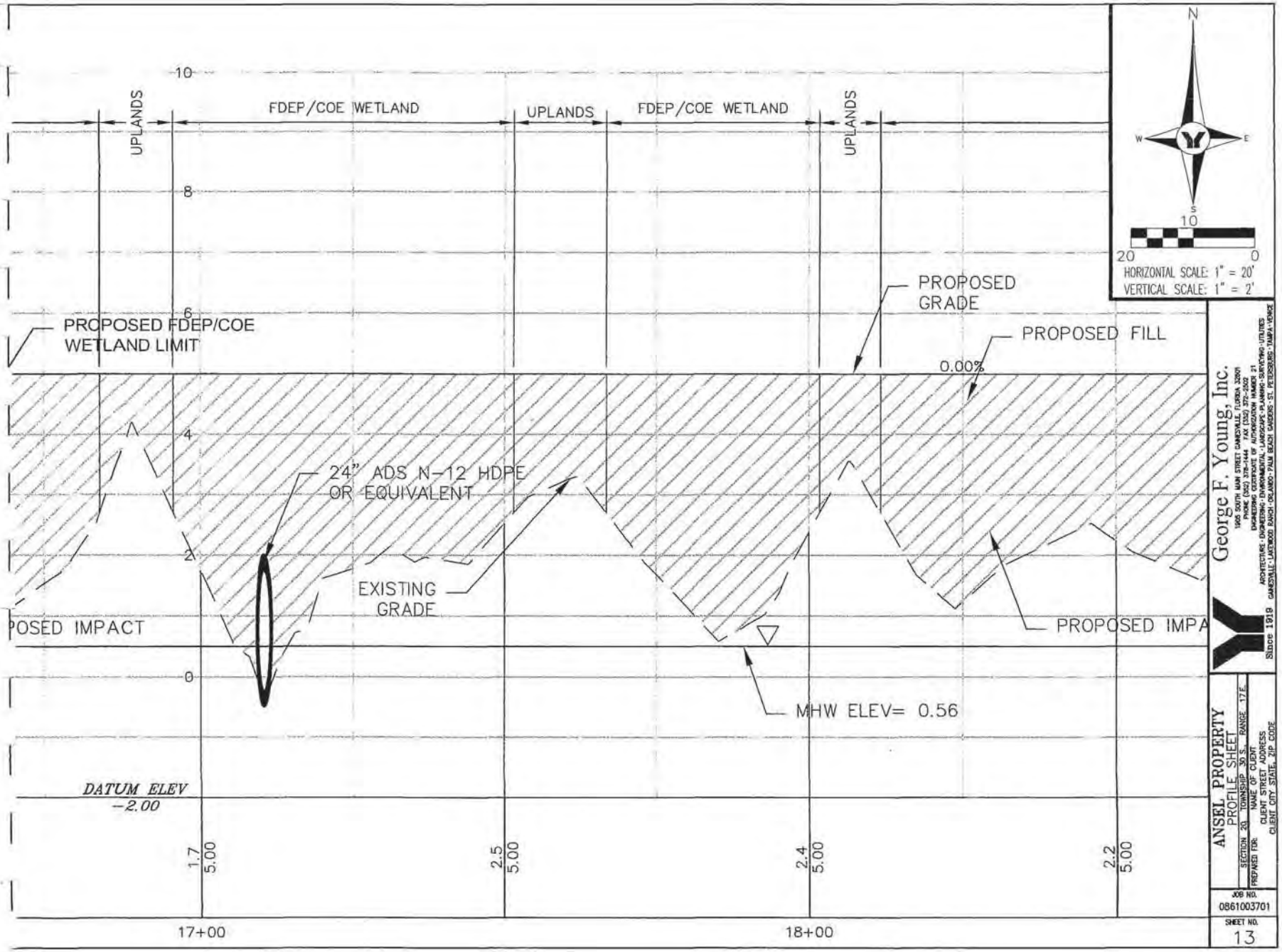
UPLANDS
FDEP/COE WETLAND
UPLANDS
FDEP/COE WETLAND
UPLANDS
10
8
6
4
2
0
PROPOSED FDEP/COE WETLAND LIMIT
PROPOSED GRADE
PROPOSED FILL
0.00%
24" ADS N-12 HDPE OR EQUIVALENT
EXISTING GRADE
POSED IMPACT
PROPOSED IMPA
MHW ELEV= 0.56
DATUM ELEV -2.00
1.7
5.00
2.5
5.00
2.4
5.00
2.2
5.00
17+00
18+00
N
W
E
S
10
20
0
HORIZONTAL SCALE: 1" = 20'
VERTICAL SCALE: 1" = 2'
George F. Young, Inc.
1905 SOUTH MAIN STREET GAINESVILLE, FLORIDA 32601
PHONE (352) 378-1444 FAX (352) 372-2502
ENGINEERING CERTIFICATE OF AUTHORIZATION NUMBER 21
ARCHITECTURE-ENGINEERING-ENVIRONMENTAL-LANDSCAPE-PLANNING-SURVEYING-UTILITIES
GAINESVILLE-LAKELAND-SANFORD-ORLANDO-PALM BEACH GARDENS-ST. PETERSBURG-TAMPA-VENICE
Since 1919
ANSEL PROPERTY
PROFILE SHEET
SECTION 20 TOWNSHIP 30 S. RANGE 17 E.
PREPARED FOR:
NAME OF CLIENT
CLIENT STREET ADDRESS
CLIENT CITY STATE, ZIP CODE
JOB NO.
0861003701
SHEET NO.
13

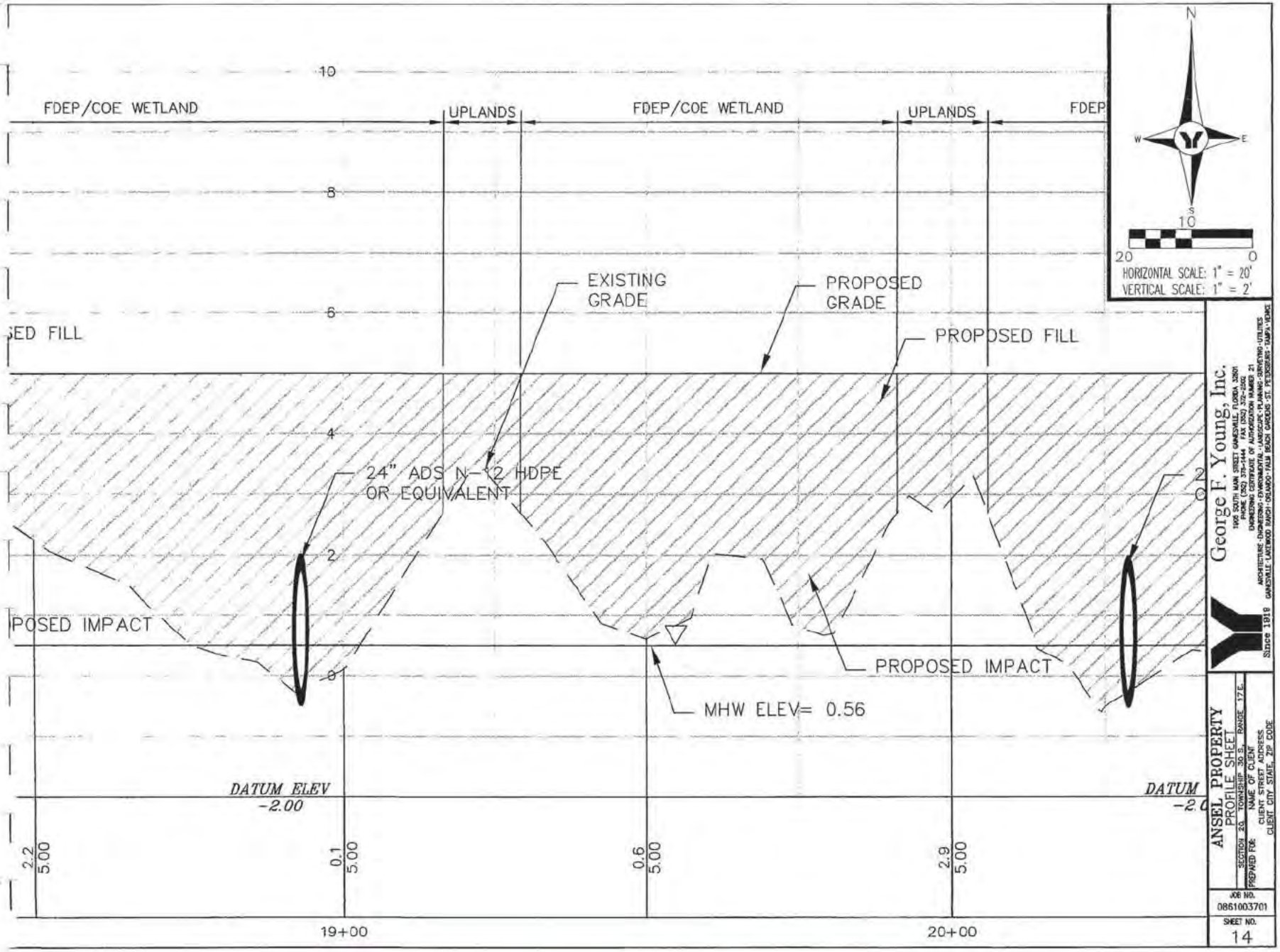
FDEP/COE WETLAND
UPLANDS
FDEP/COE WETLAND
UPLANDS
FDEP
10
8
6
4
2
0
SED FILL
EXISTING GRADE
PROPOSED GRADE
PROPOSED FILL
24" ADS N-12 HDPE OR EQUIVALENT
POSED IMPACT
PROPOSED IMPACT
MHW ELEV= 0.56
DATUM ELEV -2.00
DATUM
2.2 5.00
0.1 5.00
0.6 5.00
2.9 5.00
19+00
20+00
N
W
E
S
10
20
0
HORIZONTAL SCALE: 1" = 20'
VERTICAL SCALE: 1" = 2'
George F. Young, Inc.
1906 SOUTH MAIN STREET GAINESVILLE, FLORIDA 32601
PHONE (352) 376-1444 FAX (352) 372-2502
ENGINEERING CERTIFICATE OF AUTHORIZATION NUMBER 21
ARCHITECTURE · ENGINEERING · ENVIRONMENTAL · LAND DEVELOPMENT · SURVEYING · UTILITIES
GAINESVILLE · LAKELAND · MAGNOLIA · ORLANDO · PALM BEACH GARDENS · ST. PETERSBURG · TAMPA · HOMES
Since 1919
ANSEL PROPERTY
PROFILE SHEET
SECTION 23 TOWNSHIP 30 S. RANGE 17 E.
PREPARED FOR: NAME OF CLIENT
CLIENT STREET ADDRESS
CLIENT CITY STATE, ZIP CODE
JOB NO.
0861003701
SHEET NO.
14

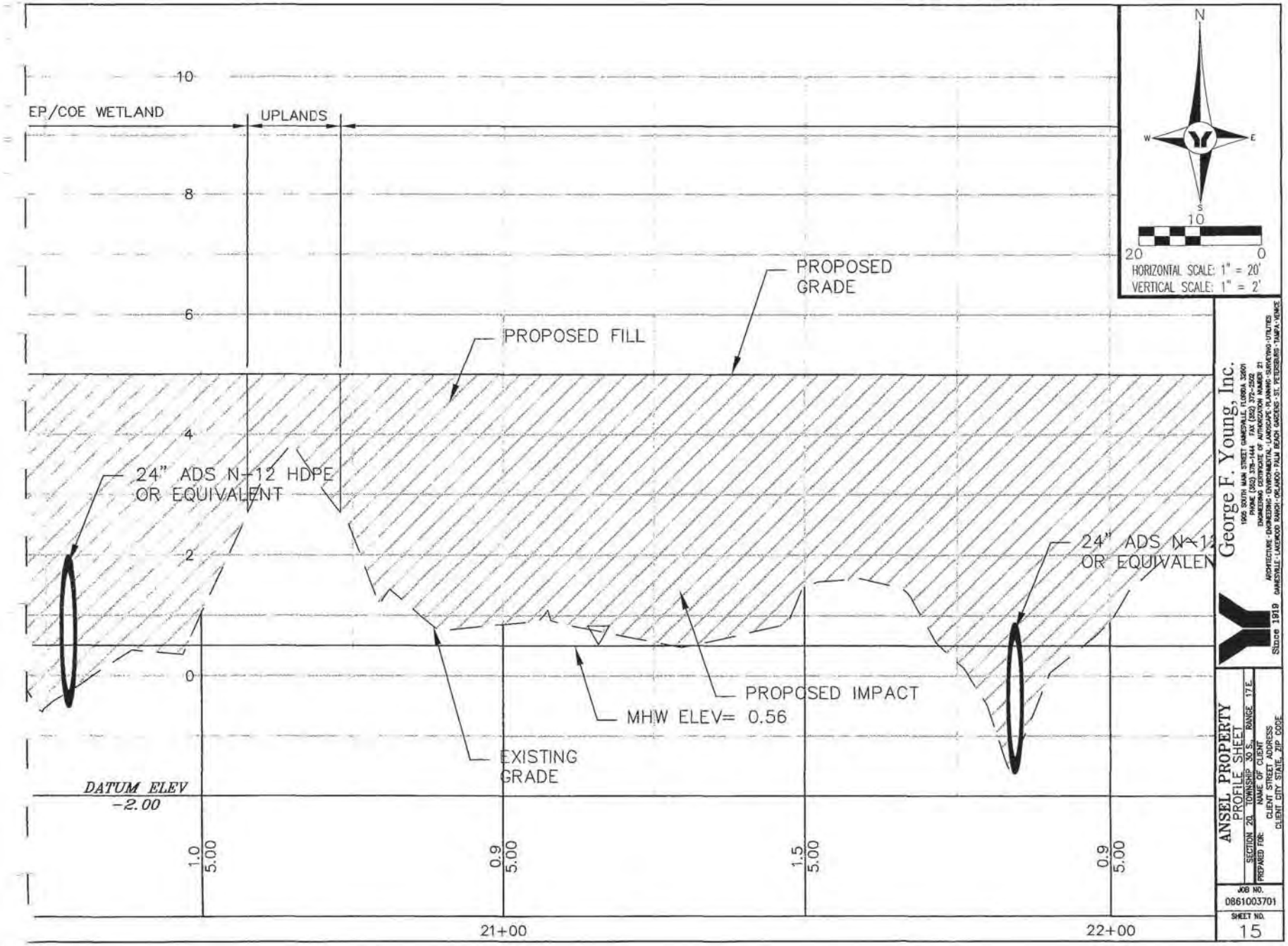
EP/COE WETLAND
UPLANDS
10
8
6
4
2
0
PROPOSED GRADE
PROPOSED FILL
24" ADS N-12 HDPE OR EQUIVALENT
24" ADS N-12 OR EQUIVALENT
PROPOSED IMPACT
MHW ELEV= 0.56
EXISTING GRADE
DATUM ELEV -2.00
1.0 5.00
0.9 5.00
1.5 5.00
0.9 5.00
21+00
22+00
N
W
E
S
10
20
0
HORIZONTAL SCALE: 1" = 20'
VERTICAL SCALE: 1" = 2'
George F. Young, Inc.
1905 SOUTH MAIN STREET GAINESVILLE, FLORIDA 32601
PHONE (352) 375-1444 FAX (352) 372-2502
ENGINEERING CERTIFICATE OF AUTHORIZATION NUMBER 21
ARCHITECTURE - ENGINEERING - ENVIRONMENTAL - LANDSCAPE - PLANNING - SURVEYING - UTILITIES
GAINESVILLE - LAKEWOOD RANCH - ORLANDO - PALM BEACH GARDENS - ST. PETERSBURG - TAMPA - VENICE
Since 1919
ANSEL PROPERTY
PROFILE SHEET
SECTION 20 TOWNSHIP 30 S. RANGE 17 E
PREPARED FOR:
NAME OF CLIENT
CLIENT STREET ADDRESS
CLIENT CITY STATE, ZIP CODE
JOB NO.
0861003701
SHEET NO.
15

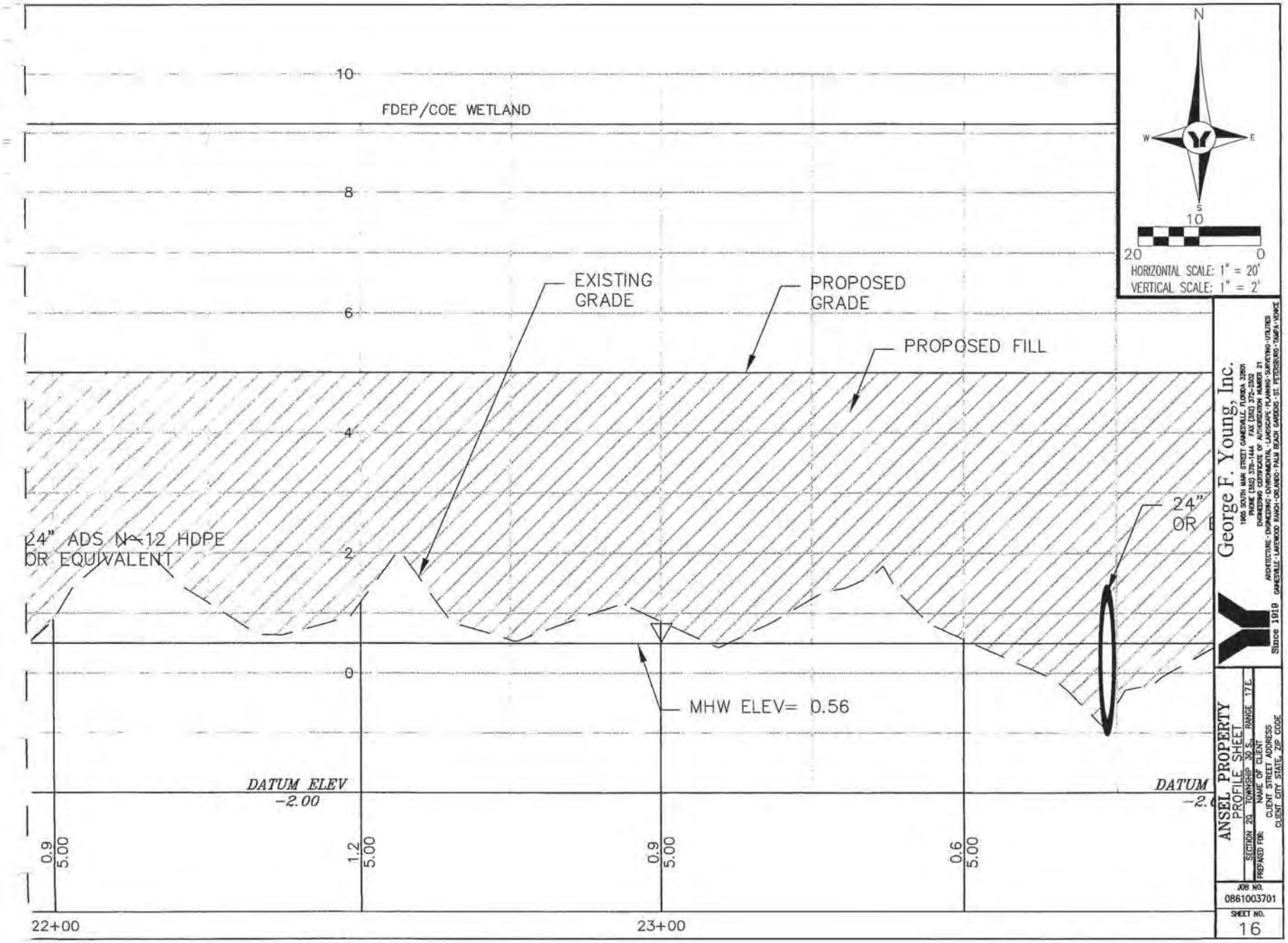
10
8
6
4
2
0
FDEP/COE WETLAND
EXISTING GRADE
PROPOSED GRADE
PROPOSED FILL
24" ADS N-12 HDPE OR EQUIVALENT
24" OR
MHW ELEV= 0.56
DATUM ELEV -2.00
DATUM -2.
0.9
5.00
1.2
5.00
0.9
5.00
0.6
5.00
22+00
23+00
N
W
E
S
10
20
0
HORIZONTAL SCALE: 1" = 20'
VERTICAL SCALE: 1" = 2'
George F. Young, Inc.
1905 SOUTH MAIN STREET GAINESVILLE, FLORIDA 32601
PHONE (352) 376-1444 FAX (352) 372-2502
ENGINEERING CERTIFICATE OF AUTHORIZATION NUMBER 21
ARCHITECTURE - ENGINEERING - ENVIRONMENTAL - LANDSCAPE - PLANNING - SURVEYING - UTILITIES
GAINESVILLE - LAKEWOOD RANCH - ORLANDO - PALM BEACH GARDENS - ST. PETERSBURG - TAMPA - VENICE
Since 1919
ANSEL PROPERTY
PROFILE SHEET
SECTION 20 TOWNSHIP 30 S. RANGE 17 E.
PREPARED FOR:
NAME OF CLIENT
CLIENT STREET ADDRESS
CLIENT CITY STATE, ZIP CODE
JOB NO.
0861003701
SHEET NO.
16

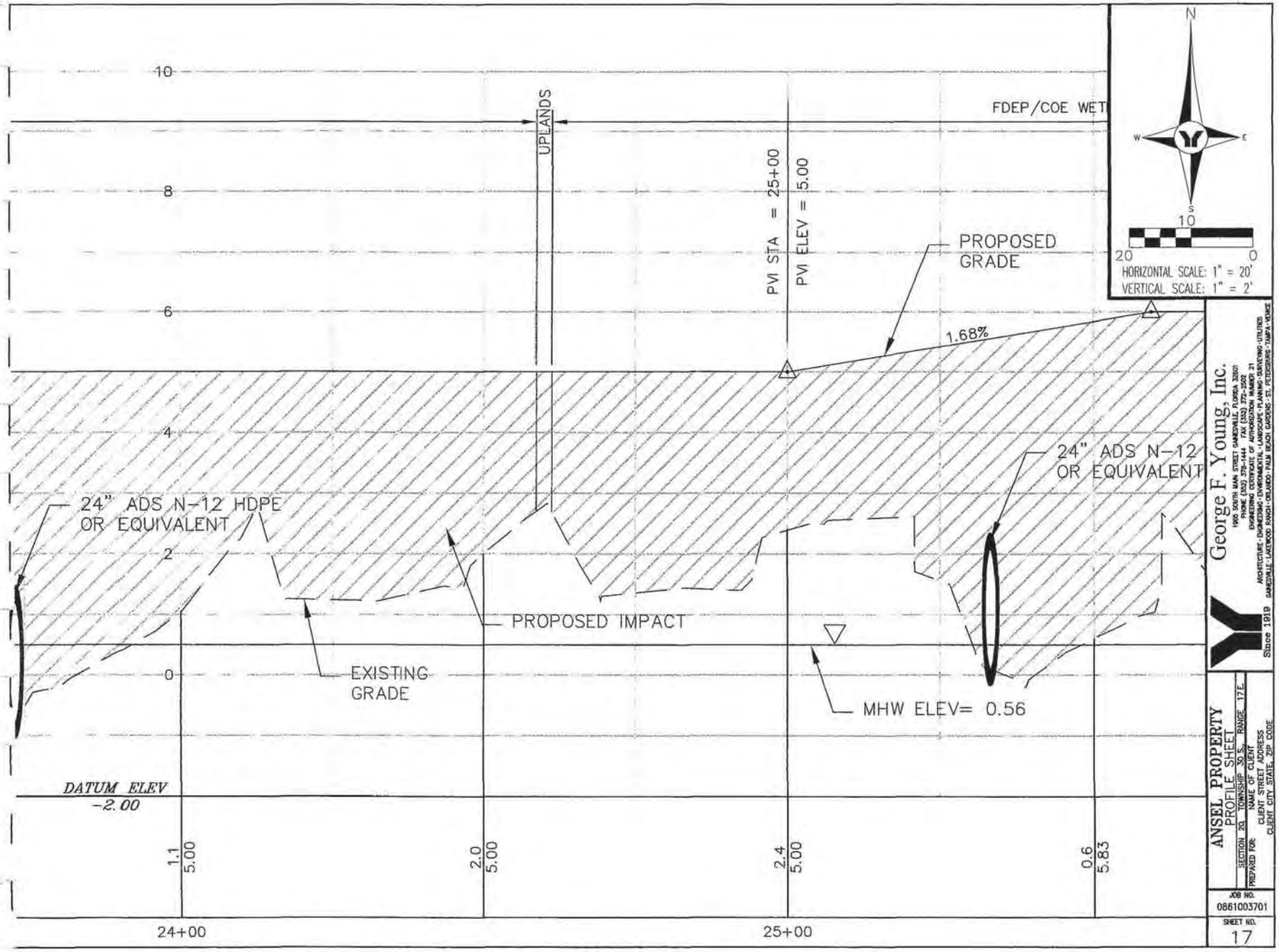
10
8
6
4
2
0
FDEP/COE WET
UPLANDS
PVI STA = 25+00
PVI ELEV = 5.00
PROPOSED GRADE
1.68%
24" ADS N-12 HDPE OR EQUIVALENT
24" ADS N-12 OR EQUIVALENT
PROPOSED IMPACT
EXISTING GRADE
MHW ELEV= 0.56
DATUM ELEV -2.00
1.1 5.00
2.0 5.00
2.4 5.00
0.6 5.83
24+00
25+00
N
W
E
S
10
20
0
HORIZONTAL SCALE: 1" = 20'
VERTICAL SCALE: 1" = 2'
George F. Young, Inc.
1920 SOUTH MAIN STREET GAINESVILLE, FLORIDA 32601
PHONE (352) 378-1444 FAX (352) 372-2502
ENGINEERING CERTIFICATE OF AUTHORIZATION NUMBER 21
ARCHITECTURE · ENGINEERING · ENVIRONMENTAL · LANDSCAPE · PLANNING · SURVEYING · UTILITIES
GAINESVILLE · LAKEWOOD RANCH · ORLANDO · PALM BEACH GARDENS · ST. PETERSBURG · TAMPA · VENICE
Since 1919
ANSEL PROPERTY
PROFILE SHEET
SECTION 20 TOWNSHIP 30 S. RANGE 17E
PREPARED FOR:
NAME OF CLIENT
CLIENT STREET ADDRESS
CLIENT CITY STATE, ZIP CODE
JOB NO.
0861003701
SHEET NO.
17

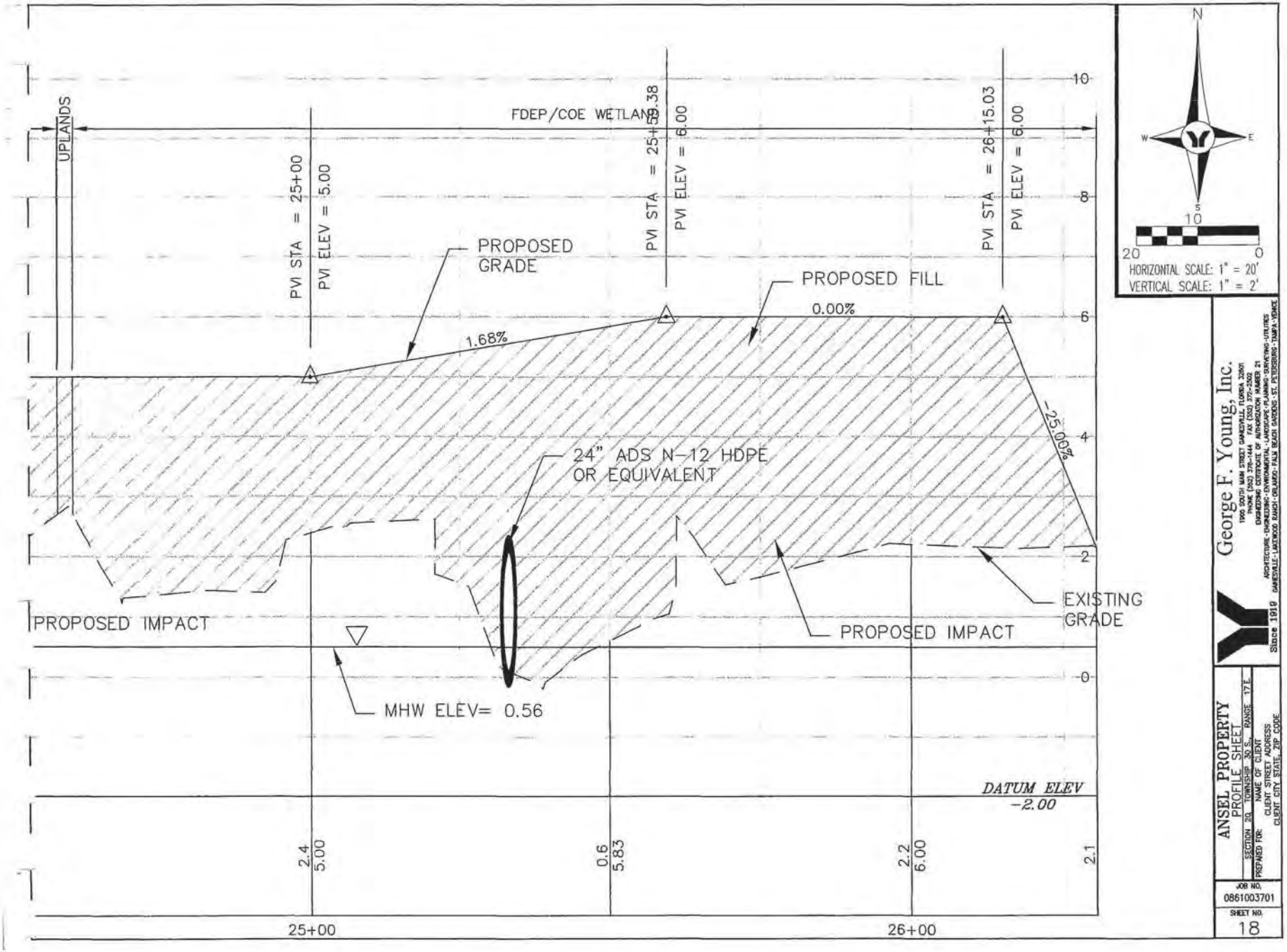
UPLANDS
FDEP/COE WETLANDS
PVI STA = 25+00
PVI ELEV = 5.00
PVI STA = 25+59.38
PVI ELEV = 6.00
PVI STA = 26+15.03
PVI ELEV = 6.00
PROPOSED GRADE
PROPOSED FILL
1.68%
0.00%
-25.00%
24" ADS N-12 HDPE OR EQUIVALENT
PROPOSED IMPACT
PROPOSED IMPACT
EXISTING GRADE
MHW ELEV= 0.56
DATUM ELEV -2.00
2.4 5.00
0.6 5.83
2.2 6.00
2.1
25+00
26+00
10
8
6
4
2
0
N
S
E
W
10
20
0
HORIZONTAL SCALE: 1" = 20'
VERTICAL SCALE: 1" = 2'
George F. Young, Inc.
Since 1919
ANSEL PROPERTY
PROFILE SHEET
SECTION 20 TOWNSHIP 30 S. RANGE 17 E.
PREPARED FOR:
NAME OF CLIENT
CLIENT STREET ADDRESS
CLIENT CITY STATE, ZIP CODE
JOB NO.
0861003701
SHEET NO.
18

HORIZONTAL SCALE: 1" = 20'
VERTICAL SCALE: 1" = 2'

12+00

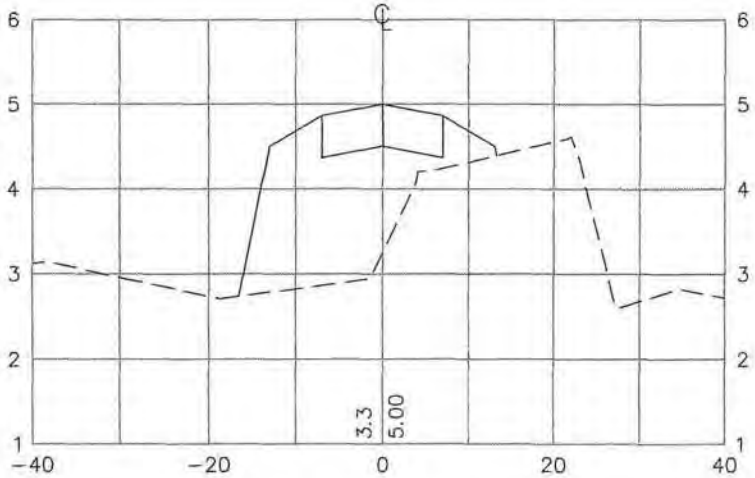


12+50

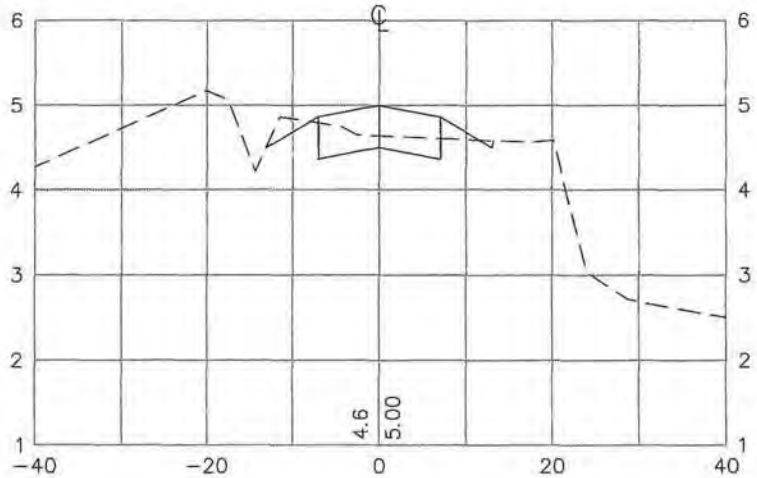


13+00

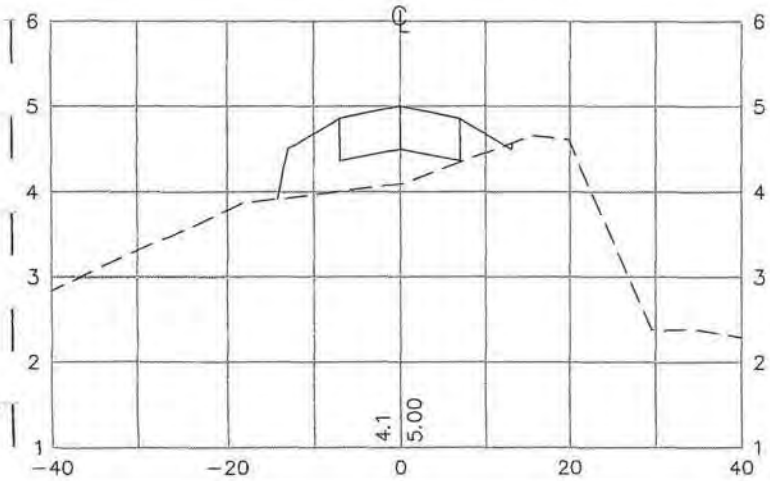


13+50

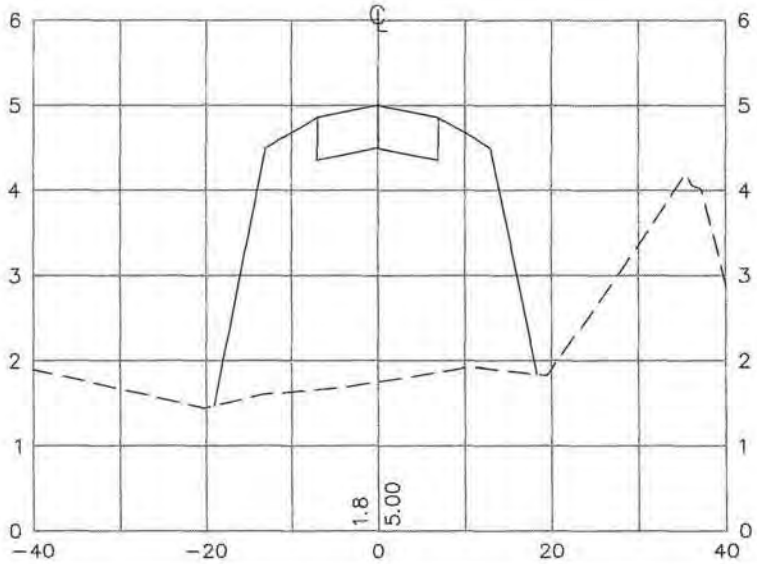


George F. Young, Inc.
Since 1919
ARCHITECTURE · ENGINEERING · ENVIRONMENTAL · LANDSCAPE · PLANNING · SURVEYING · UTILITIES
GAINESVILLE · LAKEWOOD RANCH · ORLANDO · PALM BEACH GARDENS · ST. PETERSBURG · TAMPA · VENICE

ANSEL PROPERTY
ACCESS DRIVE CROSS SECTION
SECTION 29 TOWNSHIP 30 S. RANGE 17 E.
PREPARED FOR:
NAME OF CLIENT
CLIENT STREET ADDRESS
CLIENT CITY STATE, ZIP CODE

JOB NO.
0861003701

SHEET NO.
19

HORIZONTAL SCALE: 1" = 20'
VERTICAL SCALE: 1" = 2'

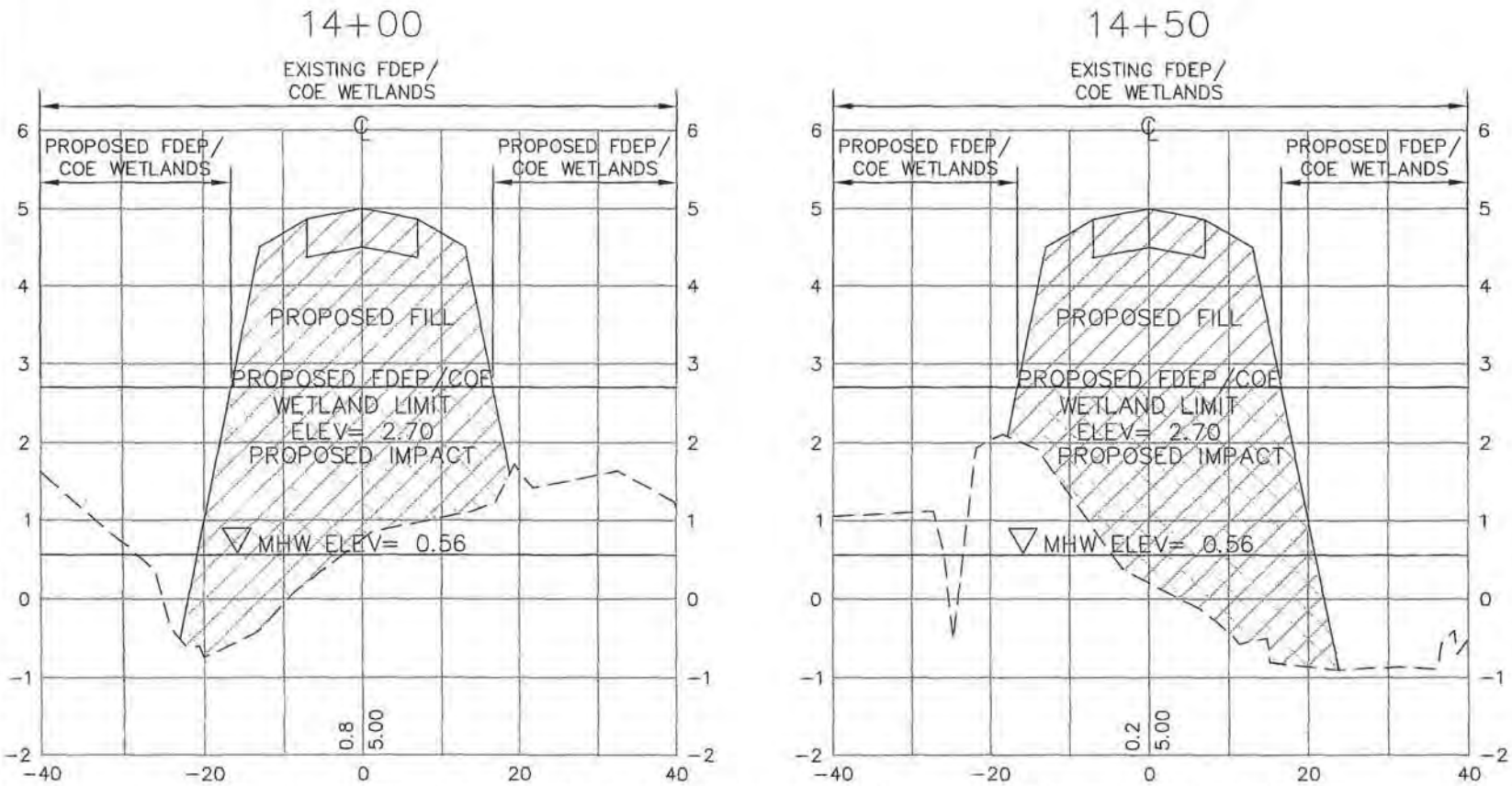


BASED ON EXISTING LOCAL CONDITIONS IT IS ASSUMED THAT POST CONSTRUCTION EVERYTHING AT OR BELOW ELEVATION 2.70' NAVD WILL BE DEVELOPED AS FDEP/COE WETLAND.

George F. Young, Inc.
1905 SOUTH MAIN STREET GAINESVILLE, FLORIDA 32601
PHONE (352) 376-1821 FAX (352) 372-8202
ENGINEERING CERTIFICATE OF AUTHORIZATION NUMBER 21
ARCHITECTURE - ENGINEERING - ENVIRONMENTAL - LANDSCAPE - PLANNING - SURVEYING - UTILITIES
GAINESVILLE - LAKEWOOD RANCH - ORLANDO - PALM BEACH GARDENS - ST. PETERSBURG - TAMPA - VENICE
Since 1919

ANSEL PROPERTY
ACCESS DRIVE CROSS SECTION
SECTION 20 TOWNSHIP 30 S. RANGE 17 E.
PREPARED FOR: NAME OF CLIENT
CLIENT STREET ADDRESS
CLIENT CITY, STATE, ZIP CODE

JOB NO.
0861003701

SHEET NO.
20

HORIZONTAL SCALE: 1" = 20'
VERTICAL SCALE: 1" = 2'

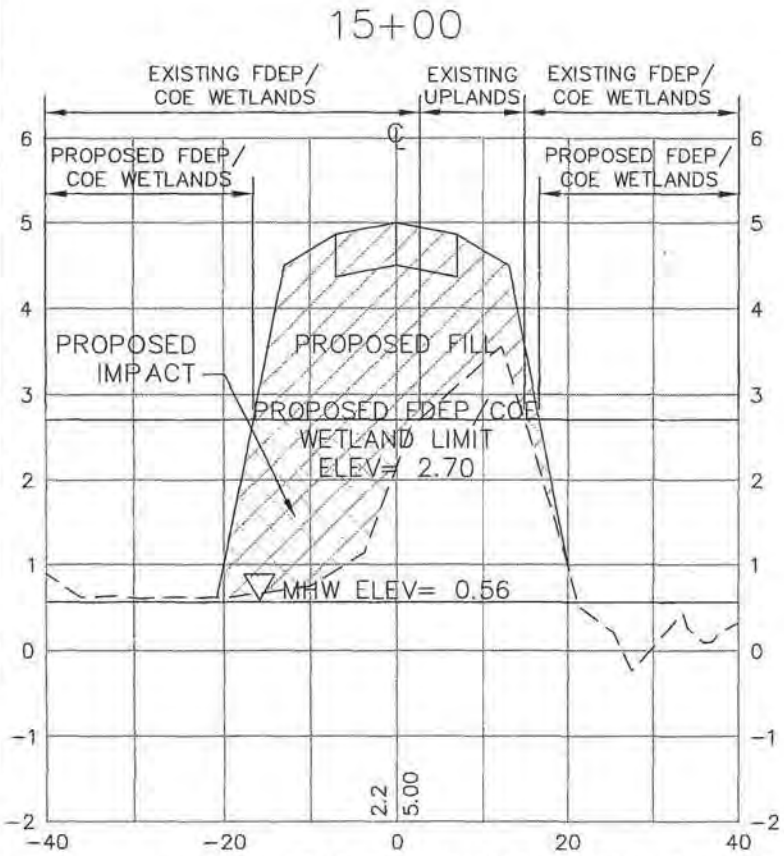


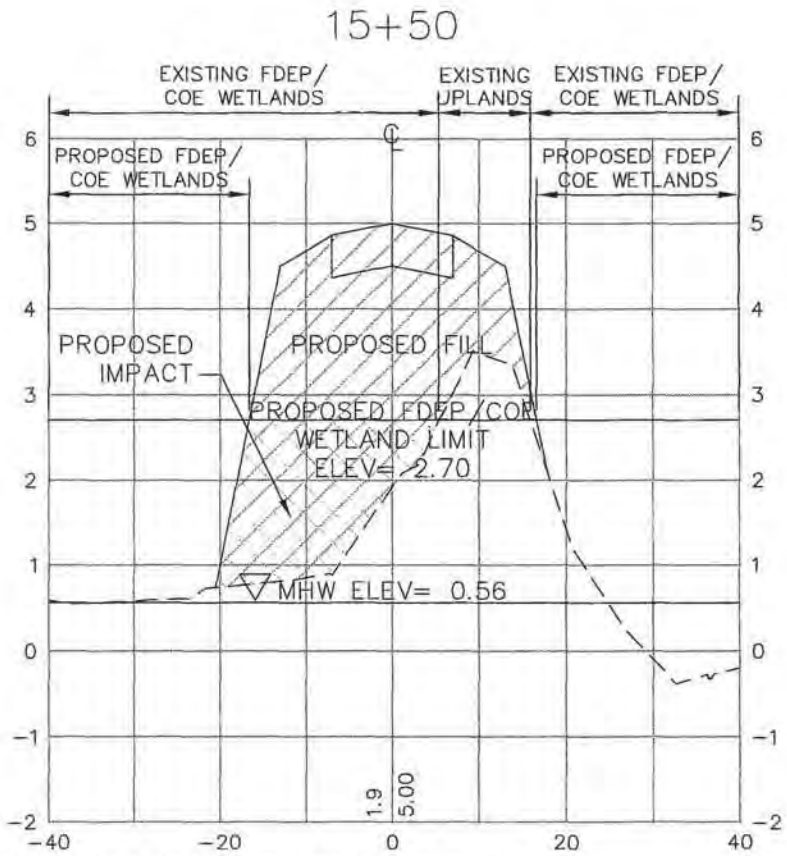


BASED ON EXISTING LOCAL CONDITIONS IT IS ASSUMED THAT POST CONSTRUCTION EVERYTHING AT OR BELOW ELEVATION 2.70' NAVD WILL BE DEVELOPED AS FDEP/COE WETLAND.


George F. Young, Inc.
1905 SOUTH MAIN STREET GAINESVILLE, FLORIDA 32601
PHONE (352) 376-1444 FAX (352) 376-2502
ENGINEERS • STRUCTURAL • MARINE
ARCHITECTURE • ENGINEERING • ENVIRONMENTAL • LANDSCAPE • PLANNING • SURVEYING • UTILITIES
GAINESVILLE • LAKEWOOD RANCH • ORLANDO • PALM BEACH GARDENS • ST. PETERSBURG • TAMPA • VENICE
Since 1919


ANSEL PROPERTY
ACCESS DRIVE CROSS SECTION
SECTION 20 TOWNSHIP 30 S. RANGE 17 E.
PREPARED FOR: NAME OF CLIENT
CLIENT STREET ADDRESS
CLIENT CITY STATE, ZIP CODE

JOB NO.
0861003701

SHEET NO.
21

HORIZONTAL SCALE: 1" = 20'
VERTICAL SCALE: 1" = 2'

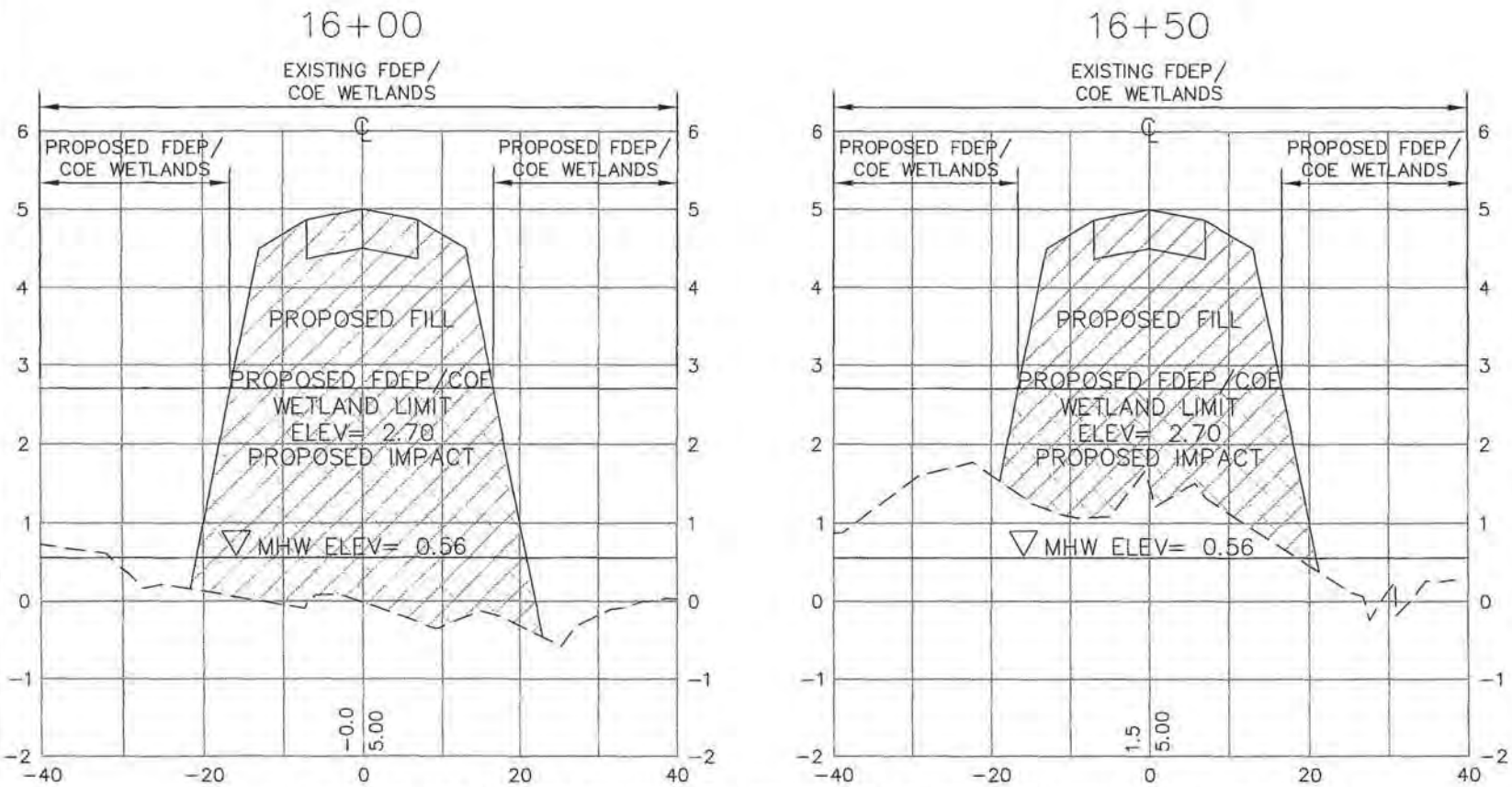


BASED ON EXISTING LOCAL CONDITIONS IT IS ASSUMED THAT POST CONSTRUCTION EVERYTHING AT OR BELOW ELEVATION 2.70' NAVD WILL BE DEVELOPED AS FDEP/COE WETLAND.

George F. Young, Inc.
1905 SOUTH MAIN STREET GAINESVILLE, FLORIDA 32601
PHONE (352) 376-1444 FAX (352) 372-2502
ENGINEERING CERTIFICATE OF AUTHORIZATION NUMBER 21
ARCHITECTURE · ENGINEERING · ENVIRONMENTAL · LANDSCAPE · PLANNING · SURVEYING · UTILITIES
GAINESVILLE · LAKELAND · RANCH · ORLANDO · PALM BEACH GARDENS · ST. PETERSBURG · TAMPA · VENICE
Since 1919

ANSEL PROPERTY
ACCESS DRIVE CROSS SECTION
SECTION 20 TOWNSHIP 30 S. RANGE 17 E.
PREPARED FOR:
NAME OF CLIENT
CLIENT STREET ADDRESS
CLIENT CITY, STATE, ZIP CODE

JOB NO.
0861003701
SHEET NO.
22

HORIZONTAL SCALE: 1" = 20'
VERTICAL SCALE: 1" = 2'

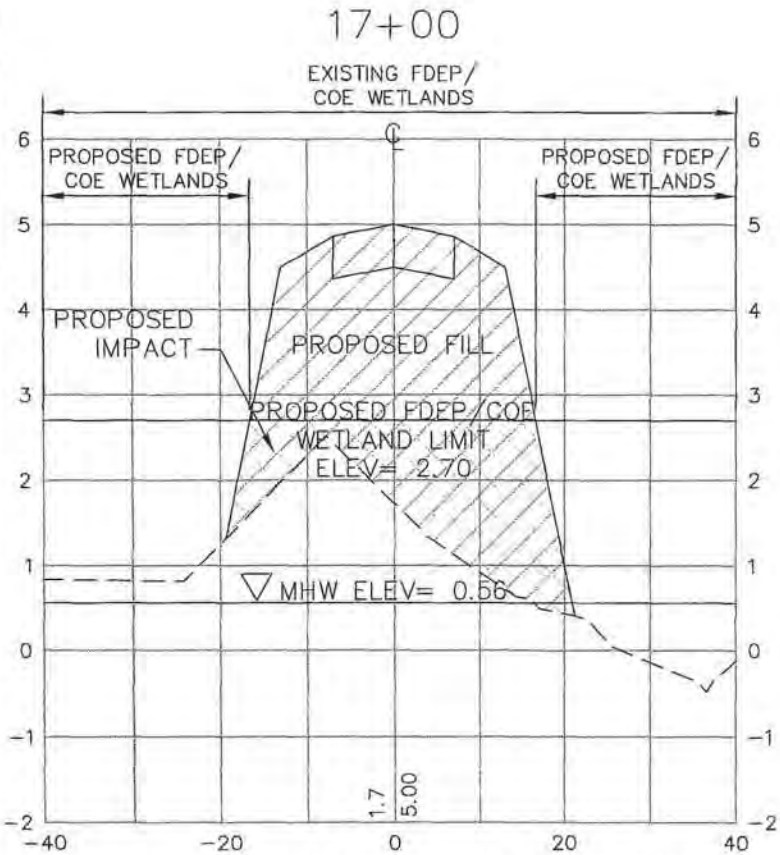


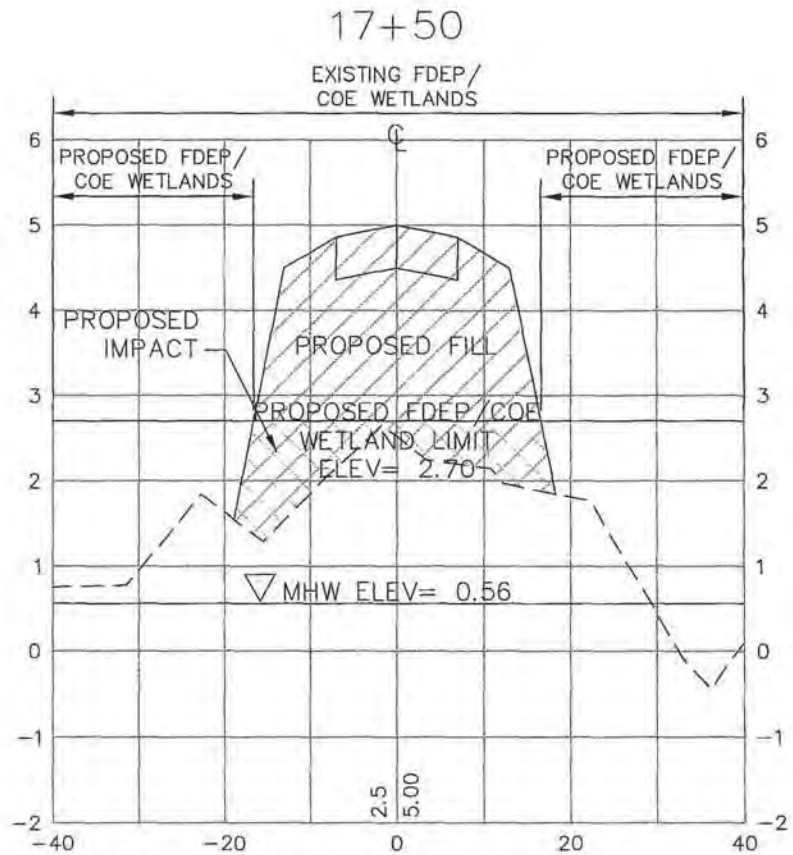


BASED ON EXISTING LOCAL CONDITIONS IT IS ASSUMED THAT POST CONSTRUCTION EVERYTHING AT OR BELOW ELEVATION 2.70' NAVD WILL BE DEVELOPED AS FDEP/COE WETLAND.

George F. Young, Inc.
1905 SOUTH MAIN STREET GAINESVILLE, FLORIDA 32601
PHONE (352) 376-1444 FAX (352) 372-2502
EMAIL: GFY@GFYOUNG.COM WEB SITE: WWW.GFYOUNG.COM
ARCHITECTURE - ENGINEERING - ENVIRONMENTAL - LANDSCAPE - PLANNING - SURVEYING - UTILITIES
GAINESVILLE - LAKEWOOD RANCH - ORLANDO - PALM BEACH GARDENS - ST. PETERSBURG - TAMPA - VENICE
Since 1919

ANSEL PROPERTY
ACCESS DRIVE CROSS SECTION
SECTION 20 TOWNSHIP 30 S. RANGE 17 E.
PREPARED FOR: NAME OF CLIENT
CLIENT STREET ADDRESS
CLIENT CITY, STATE, ZIP CODE

JOB NO.
0861003701
SHEET NO.
23

HORIZONTAL SCALE: 1" = 20'
VERTICAL SCALE: 1" = 2'

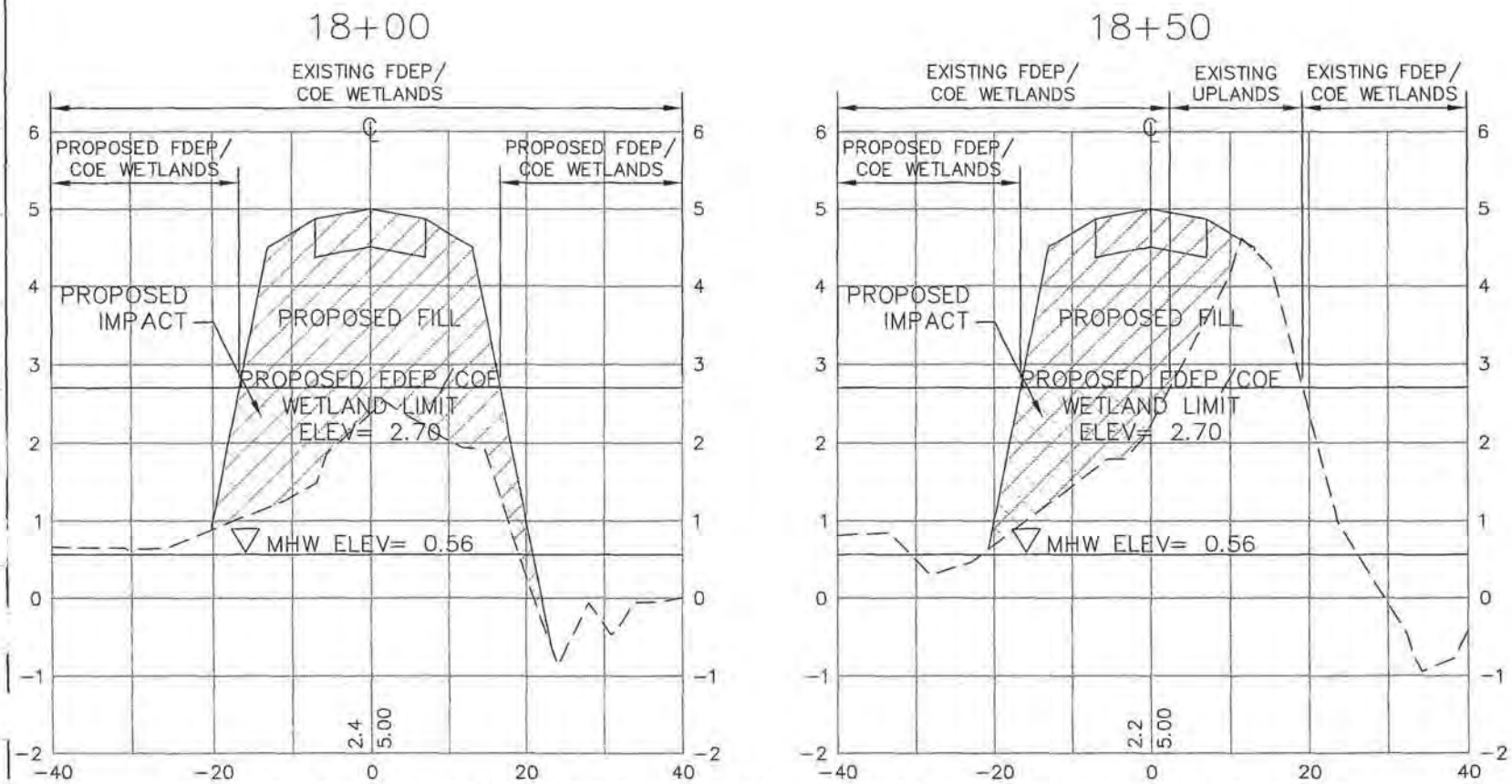


BASED ON EXISTING LOCAL CONDITIONS IT IS ASSUMED THAT POST CONSTRUCTION EVERYTHING AT OR BELOW ELEVATION 2.70' NAVD WILL BE DEVELOPED AS FDEP/COE WETLAND.

George F. Young, Inc.
1905 SOUTH MAIN STREET GAINESVILLE, FLORIDA 32601
PHONE (352) 378-1444 FAX (352) 378-2822
ENGINEERS • SURVEYORS • ARCHITECTS • LANDSCAPE ARCHITECTS 21
ARCHITECTURE • ENGINEERING • ENVIRONMENTAL • LANDSCAPE • PLANNING • SURVEYING • UTILITIES
GAINESVILLE • LAKEWOOD RANCH • ORLANDO • PALM BEACH GARDENS • ST. PETERSBURG • TAMPA • VENICE
Since 1919

ANSEL PROPERTY
ACCESS DRIVE CROSS SECTION
SECTION 20 TOWNSHIP 30 S. RANGE 17 E.
PREPARED FOR: NAME OF CLIENT
CLIENT STREET ADDRESS
CLIENT CITY STATE, ZIP CODE

JOB NO.
0861003701
SHEET NO.
24

HORIZONTAL SCALE: 1" = 20'
VERTICAL SCALE: 1" = 2'

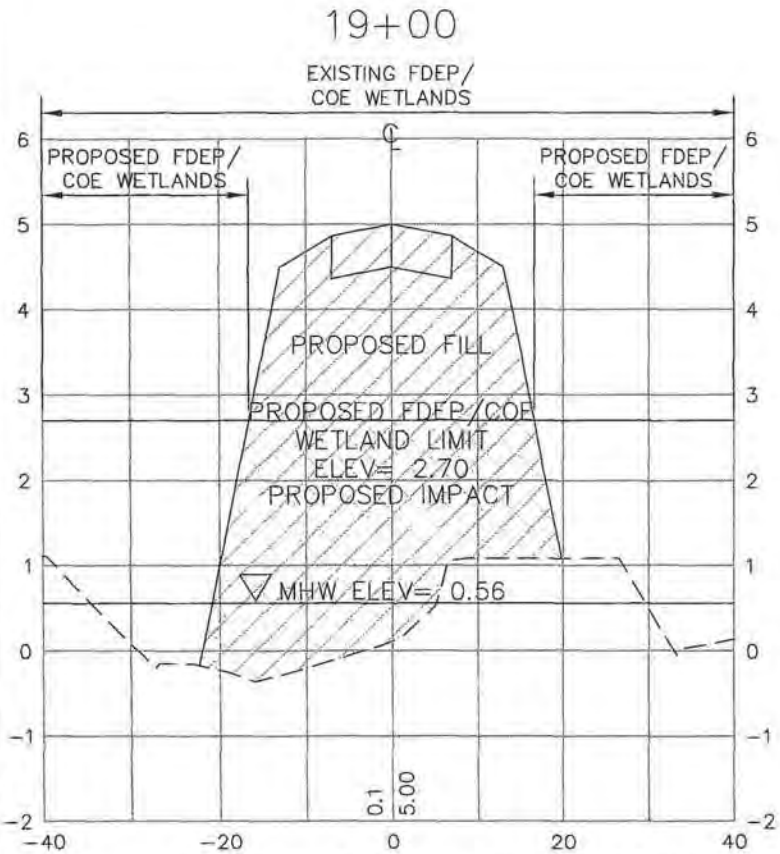


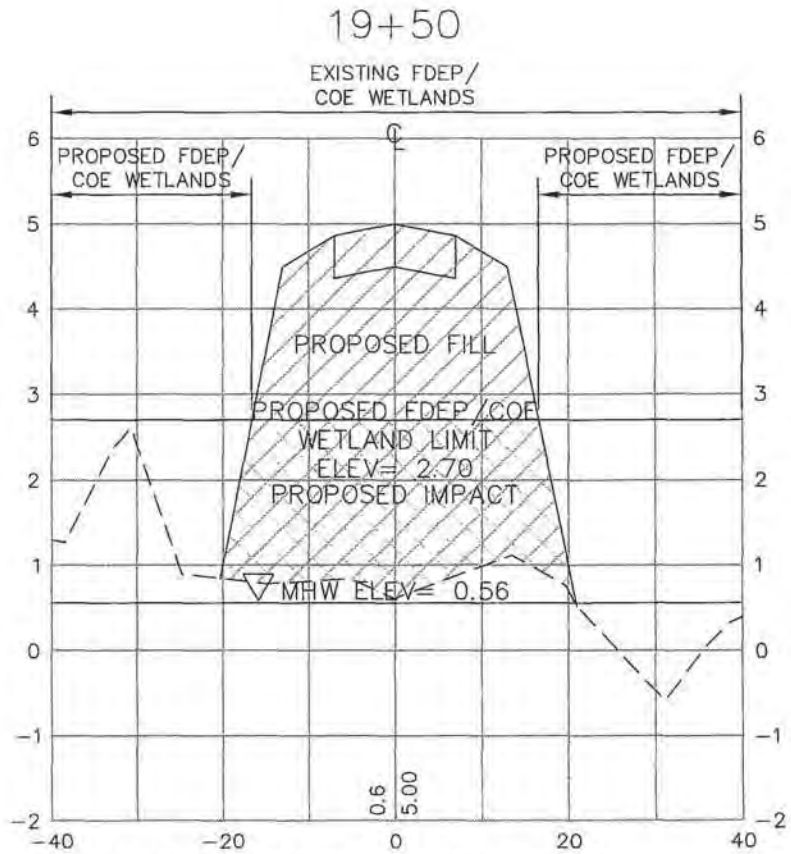


BASED ON EXISTING LOCAL CONDITIONS IT IS ASSUMED THAT POST CONSTRUCTION EVERYTHING AT OR BELOW ELEVATION 2.70' NAVD WILL BE DEVELOPED AS FDEP/COE WETLAND.


George F. Young, Inc.
1905 SOUTH MAIN STREET GAINESVILLE, FLORIDA 32601
PHONE: (352) 376-1444 FAX: (352) 372-2502
ENGINEERING CERTIFICATE OF AUTHORIZATION NUMBER: 21
ARCHITECTURE • ENGINEERING • SURVEYING • LANDSCAPE ARCHITECTURE • PLANNING • SURVEYING • UTILITIES
GAINESVILLE • LAKEWOOD RANCH • ORLANDO • PALM BEACH GARDENS • ST. PETERSBURG • TAMPA • VENICE
Since 1919


ANSEL PROPERTY
ACCESS DRIVE CROSS SECTION
SECTION 20, TOWNSHIP 30 S., RANGE 17 E.
PREPARED FOR: NAME OF CLIENT
CLIENT STREET ADDRESS
CLIENT CITY, STATE, ZIP CODE

JOB NO.
0861003701

SHEET NO.
25

HORIZONTAL SCALE: 1" = 20'
VERTICAL SCALE: 1" = 2'

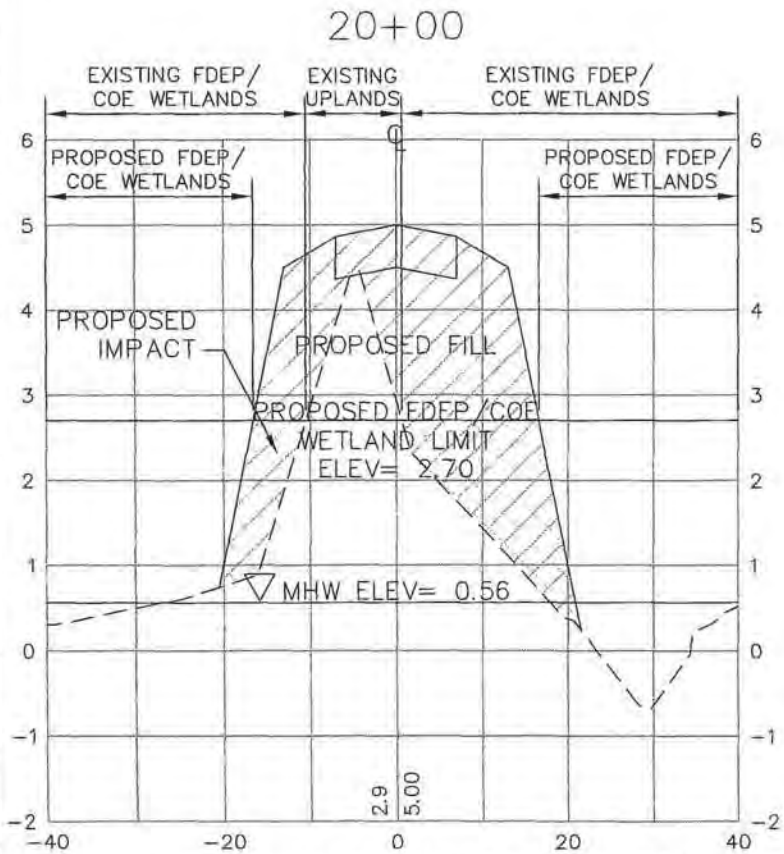


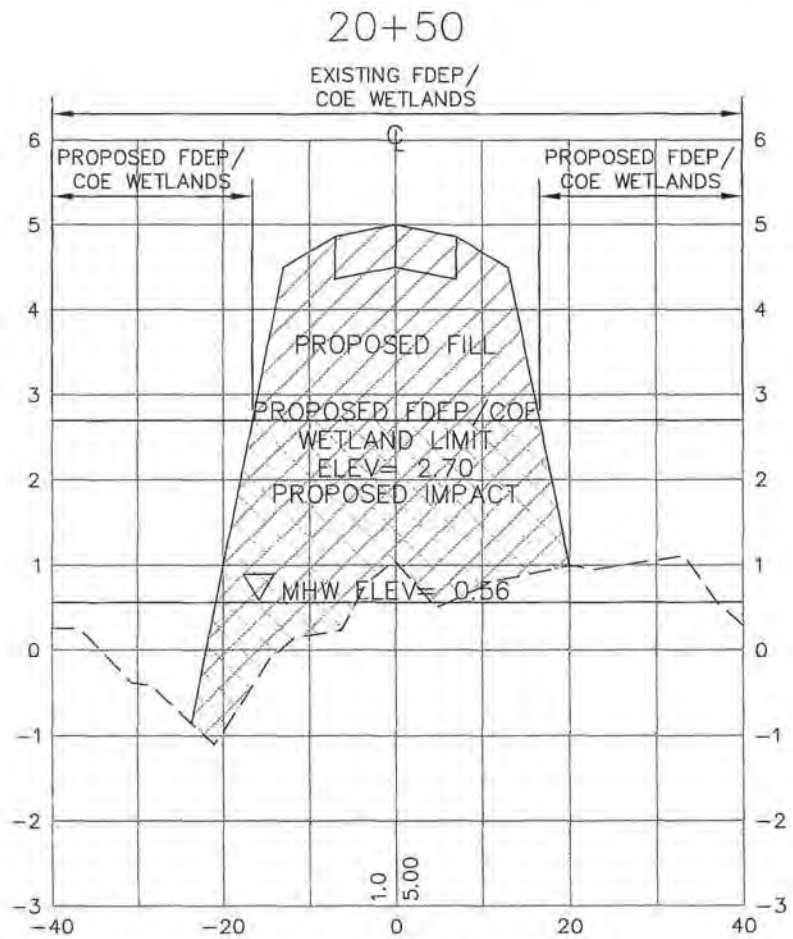


BASED ON EXISTING LOCAL CONDITIONS IT IS ASSUMED THAT POST CONSTRUCTION EVERYTHING AT OR BELOW ELEVATION 2.70' NAVD WILL BE DEVELOPED AS FDEP/COE WETLAND.


George F. Young, Inc.
1905 SOUTH MAIN STREET GAINESVILLE, FLORIDA 32601
PHONE (352) 378-1444 FAX (352) 372-2502
ENGINEERING CERTIFICATE OF AUTHORIZATION NUMBER 21
ARCHITECTURE · ENGINEERING · SURVEYING · LANDSCAPE ARCHITECTURE · PLANNING · UTILITIES
GAINESVILLE · LAKEWOOD RANCH · ORLANDO · PALM BEACH GARDENS · ST. PETERSBURG · TAMPA · VENICE
Since 1919


ANSEL PROPERTY
ACCESS DRIVE CROSS SECTION
SECTION 20 TOWNSHIP 30 S. RANGE 17 E.
PREPARED FOR: NAME OF CLIENT
CLIENT STREET ADDRESS
CLIENT CITY, STATE, ZIP CODE

JOB NO. 0861003701

SHEET NO. 26

HORIZONTAL SCALE: 1" = 20'
VERTICAL SCALE: 1" = 2'

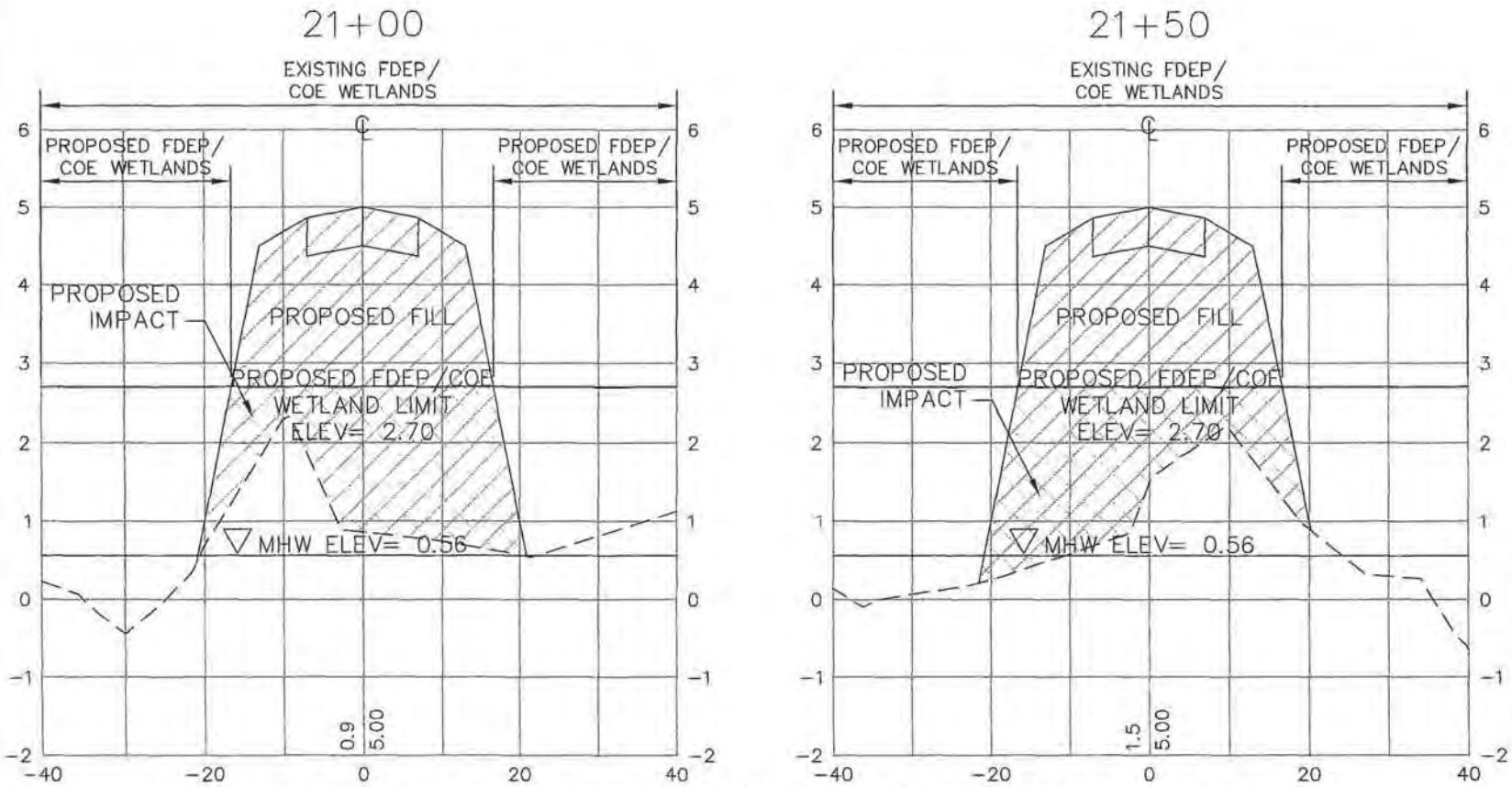


BASED ON EXISTING LOCAL CONDITIONS IT IS ASSUMED THAT POST CONSTRUCTION EVERYTHING AT OR BELOW ELEVATION 2.70' NAVD WILL BE DEVELOPED AS FDEP/COE WETLAND.

George F. Young, Inc.
1905 SOUTH MAIN STREET GAINESVILLE, FLORIDA 32601
PHONE (352) 378-1444 FAX (352) 372-3502
ENGINEERING CERTIFICATE OF AUTHORIZATION NUMBER 21
ARCHITECTURE · ENGINEERING · SURVEYING · LANDSCAPE ARCHITECTURE · PLANNING · SITE DESIGN · UTILITIES
GAINESVILLE · LAKEWOOD RANCH · ORLANDO · PALM BEACH GARDENS · ST. PETERSBURG · TAMPA · VENICE
SINCE 1919

ANSEL PROPERTY
ACCESS DRIVE CROSS SECTION
SECTION 20, TOWNSHIP 30 S., RANGE 17 E.
PREPARED FOR: NAME OF CLIENT
CLIENT STREET ADDRESS
CLIENT CITY, STATE, ZIP CODE

JOB NO. 0861003701
SHEET NO. 27

HORIZONTAL SCALE: 1" = 20'
VERTICAL SCALE: 1" = 2'

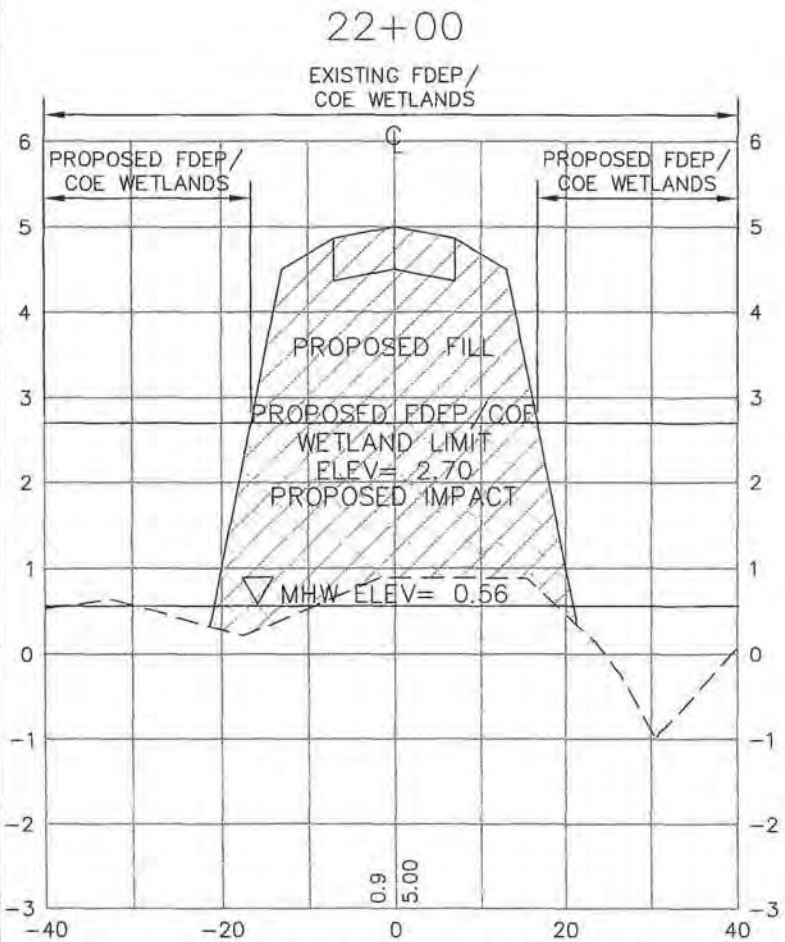


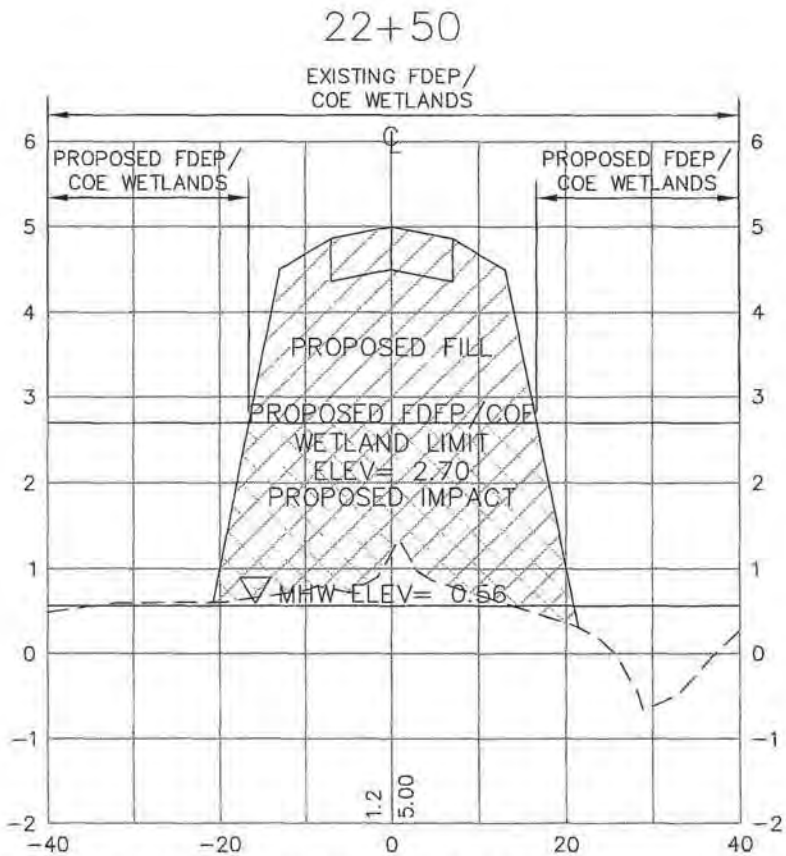


BASED ON EXISTING LOCAL CONDITIONS IT IS ASSUMED THAT POST CONSTRUCTION EVERYTHING AT OR BELOW ELEVATION 2.70' NAVD WILL BE DEVELOPED AS FDEP/COE WETLAND.

George F. Young, Inc.
1905 SOUTH MAIN STREET GAINESVILLE FLORIDA 32601
PHONE (352) 376-1444 FAX (352) 372-2502
ENGINEERS • CERTIFICATE OF AUTHORIZATION NO. 1-1-1-1-71
ARCHITECTURE • ENGINEERING • PLANNING • LANDSCAPE ARCHITECTURE • SURVEYING • UTILITIES
GAINESVILLE • LAKELAND • ORLANDO • PALM BEACH GARDENS • ST. PETERSBURG • TAMPA • VENICE
Since 1919

ANSEL PROPERTY
ACCESS DRIVE CROSS SECTION
SECTION 20 TOWNSHIP 30 S. RANGE 17 E.
PREPARED FOR: NAME OF CLIENT
CLIENT STREET ADDRESS
CLIENT CITY STATE ZIP CODE

JOB NO.
0861003701

SHEET NO.
28

HORIZONTAL SCALE: 1" = 20'
VERTICAL SCALE: 1" = 2'

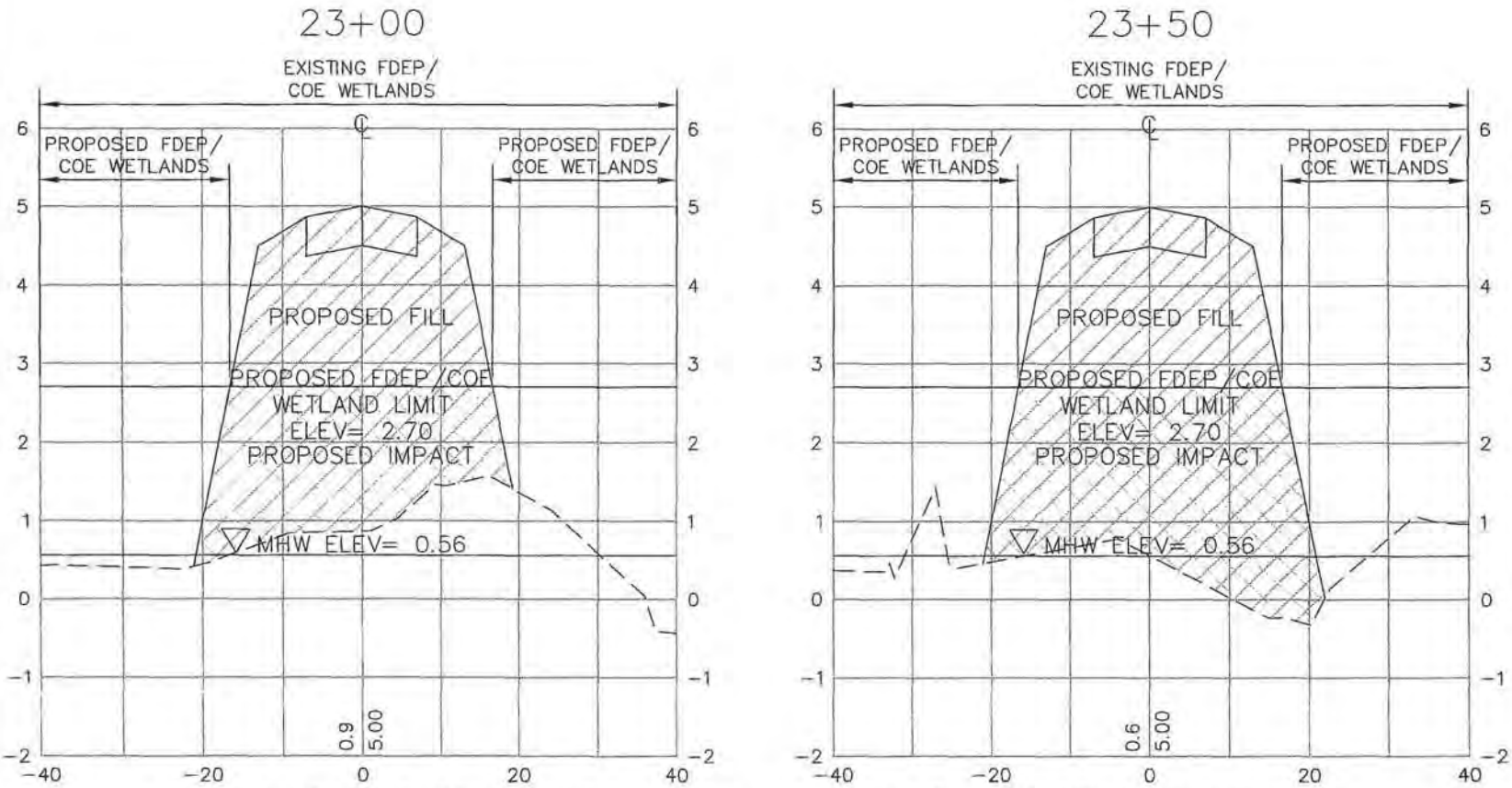


BASED ON EXISTING LOCAL CONDITIONS IT IS ASSUMED THAT POST CONSTRUCTION EVERYTHING AT OR BELOW ELEVATION 2.70' NAVD WILL BE DEVELOPED AS FDEP/COE WETLAND.

George F. Young, Inc.
1905 SOUTH MAIN STREET GAINESVILLE, FLORIDA 32601
PHONE (352) 378-1444 FAX (352) 372-2502
ENGINEERING CERTIFICATE OF AUTHORIZATION NUMBER 21
ARCHITECTURE • ENGINEERING • LANDSCAPE ARCHITECTURE • LAND SURVEYING • UTILITIES
GAINESVILLE • LAKEWOOD RANCH • ORLANDO • PALM BEACH GARDENS • ST. PETERSBURG • TAMPA • VENICE
Since 1919

ANSEL PROPERTY
ACCESS DRIVE CROSS SECTION
SECTION 23 TOWNSHIP 39 S. RANGE 17 E.
PREPARED FOR: NAME OF CLIENT
CLIENT STREET ADDRESS
CLIENT CITY, STATE, ZIP CODE

JOB NO.
0861003701

SHEET NO.
29

HORIZONTAL SCALE: 1" = 20'
VERTICAL SCALE: 1" = 2'

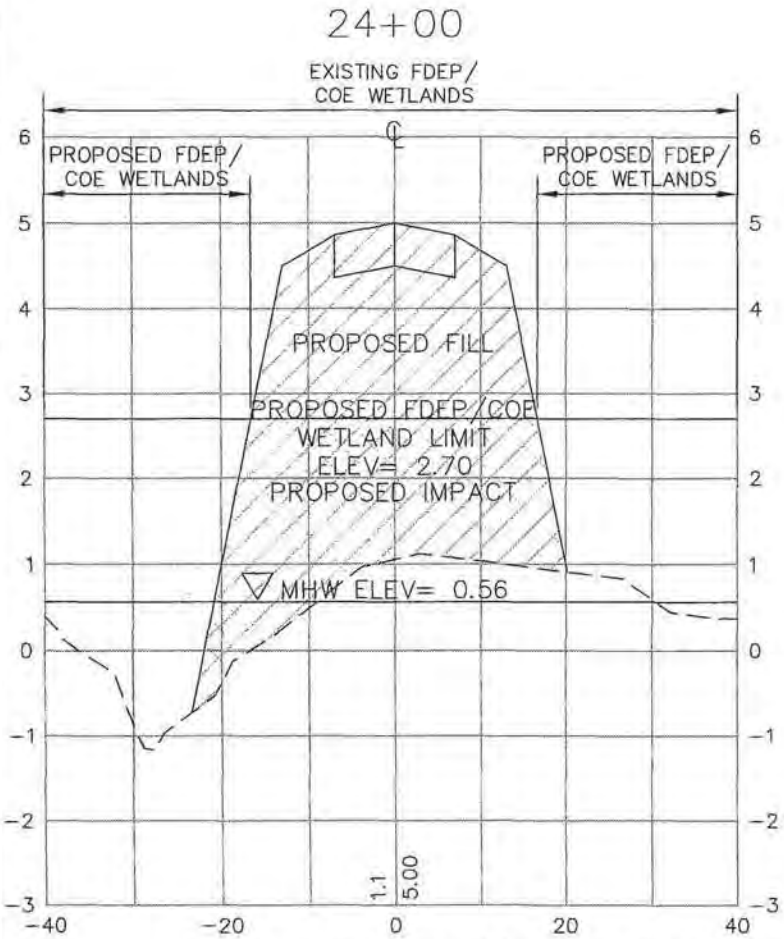


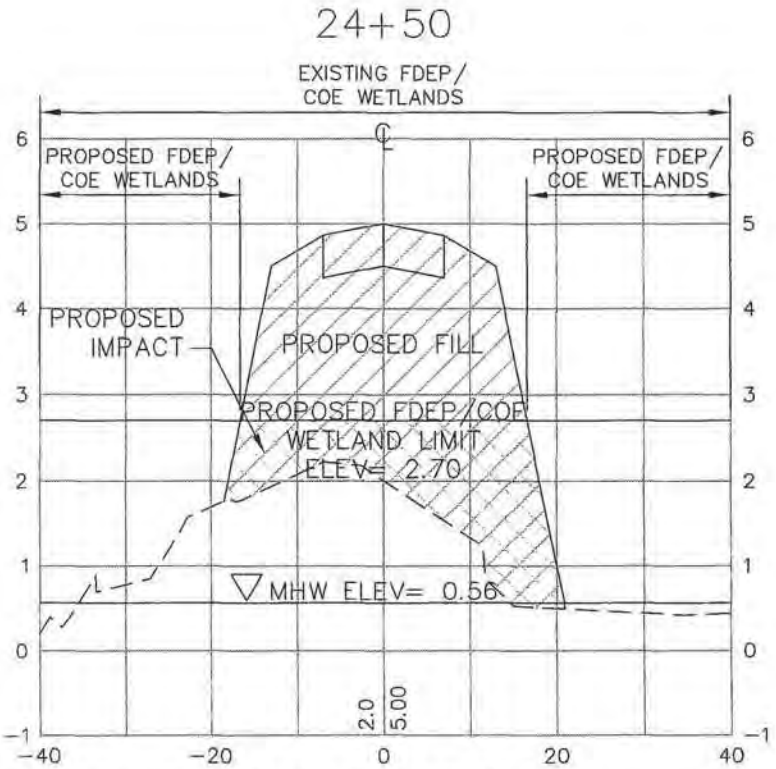


BASED ON EXISTING LOCAL CONDITIONS IT IS ASSUMED THAT POST CONSTRUCTION EVERYTHING AT OR BELOW ELEVATION 2.70' NAVD WILL BE DEVELOPED AS FDEP/COE WETLAND.


George F. Young, Inc.
1905 SOUTH MAIN STREET GAINESVILLE FLORIDA 32601
PHONE (352) 378-1444 FAX (352) 372-2502
ENGINEERING CERTIFICATE OF AUTHORIZATION NUMBER 21
ARCHITECTURE-ENGINEERING-PLANNING-SURVEYING-UTILITIES
GAINESVILLE-LAKEWOOD RANCH-ORLANDO-PALM BEACH GARDENS-ST. PETERSBURG-TAMPA-VENICE
Since 1919


ANSEL PROPERTY
ACCESS DRIVE CROSS SECTION
SECTION 20 TOWNSHIP 39 S. RANGE 17 E.
PREPARED FOR: NAME OF CLIENT
CLIENT STREET ADDRESS
CLIENT CITY STATE, ZIP CODE

JOB NO.
0861003701

SHEET NO.
30

HORIZONTAL SCALE: 1" = 20'
VERTICAL SCALE: 1" = 2'

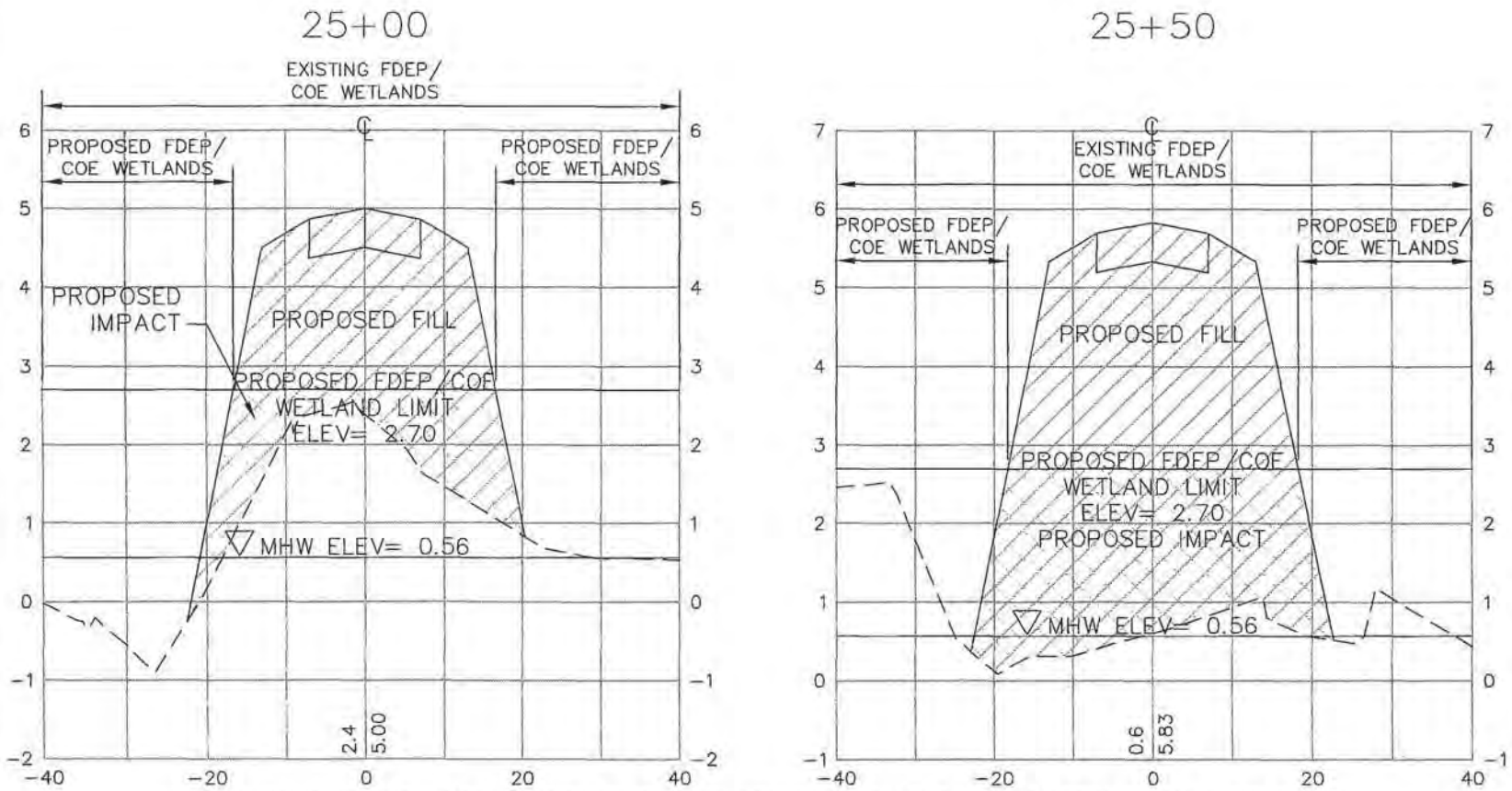


BASED ON EXISTING LOCAL CONDITIONS IT IS ASSUMED THAT POST CONSTRUCTION EVERYTHING AT OR BELOW ELEVATION 2.70' NAVD WILL BE DEVELOPED AS FDEP/COE WETLAND.

George F. Young, Inc.
1105 SOUTH MAIN STREET GAINESVILLE, FLORIDA 32601
PHONE (352) 376-1444 FAX (352) 372-2502
ENGINEERING CERTIFICATE OF AUTHORIZATION NUMBER 21
ARCHITECTURE, ENGINEERING, GEOTECHNICAL, LANDSCAPE ARCHITECTURE, SURVEYING, UTILITIES
GAINESVILLE · LAKEWOOD RANCH · ORLANDO · PALM BEACH GARDENS · ST. PETERSBURG · TAMPA · VENICE
Since 1919

ANSEL PROPERTY
ACCESS DRIVE CROSS SECTION
SECTION 20, TOWNSHIP 39 S., RANGE 17 E.
PREPARED FOR: NAME OF CLIENT
CLIENT STREET ADDRESS
CLIENT CITY, STATE, ZIP CODE

JOB NO.
0861003701
SHEET NO.
31

HORIZONTAL SCALE: 1" = 20'
VERTICAL SCALE: 1" = 2'

26+00

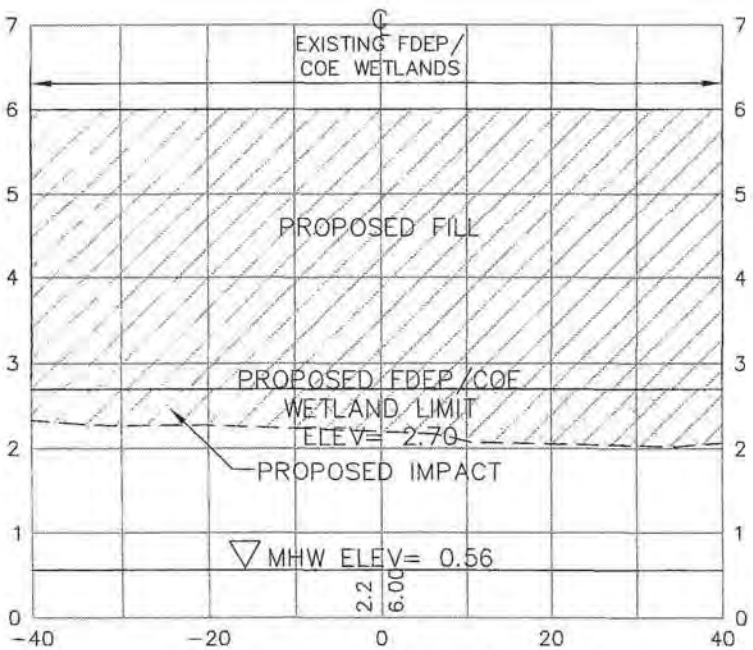


BASED ON EXISTING LOCAL CONDITIONS IT IS ASSUMED THAT POST CONSTRUCTION EVERYTHING AT OR BELOW ELEVATION 2.70' NAVD WILL BE DEVELOPED AS FDEP/COE WETLAND.


George F. Young, Inc.
1905 SOUTH MAIN STREET GAINESVILLE, FLORIDA 32601
PHONE (352) 376-1444 FAX (352) 372-2502
ENGINEERING CERTIFICATE OF AUTHORIZATION NUMBER 21
ARCHITECTURE - ENGINEERING - ENVIRONMENTAL - LANDSCAPE PLANNING - SURVEYING - UTILITIES
Since 1919 GAINESVILLE - LAKELAND - ORLANDO - PALM BEACH GARDENS - ST. PETERSBURG - TAMPA - HOMES


ANSEL PROPERTY
ACCESS DRIVE CROSS SECTION
SECTION 26 TOWNSHIP 30 S. RANGE 17 E.
PREPARED FOR:
NAME OF CLIENT
CLIENT STREET ADDRESS
CLIENT CITY STATE, ZIP CODE

JOB NO.
0861003701

SHEET NO.
32

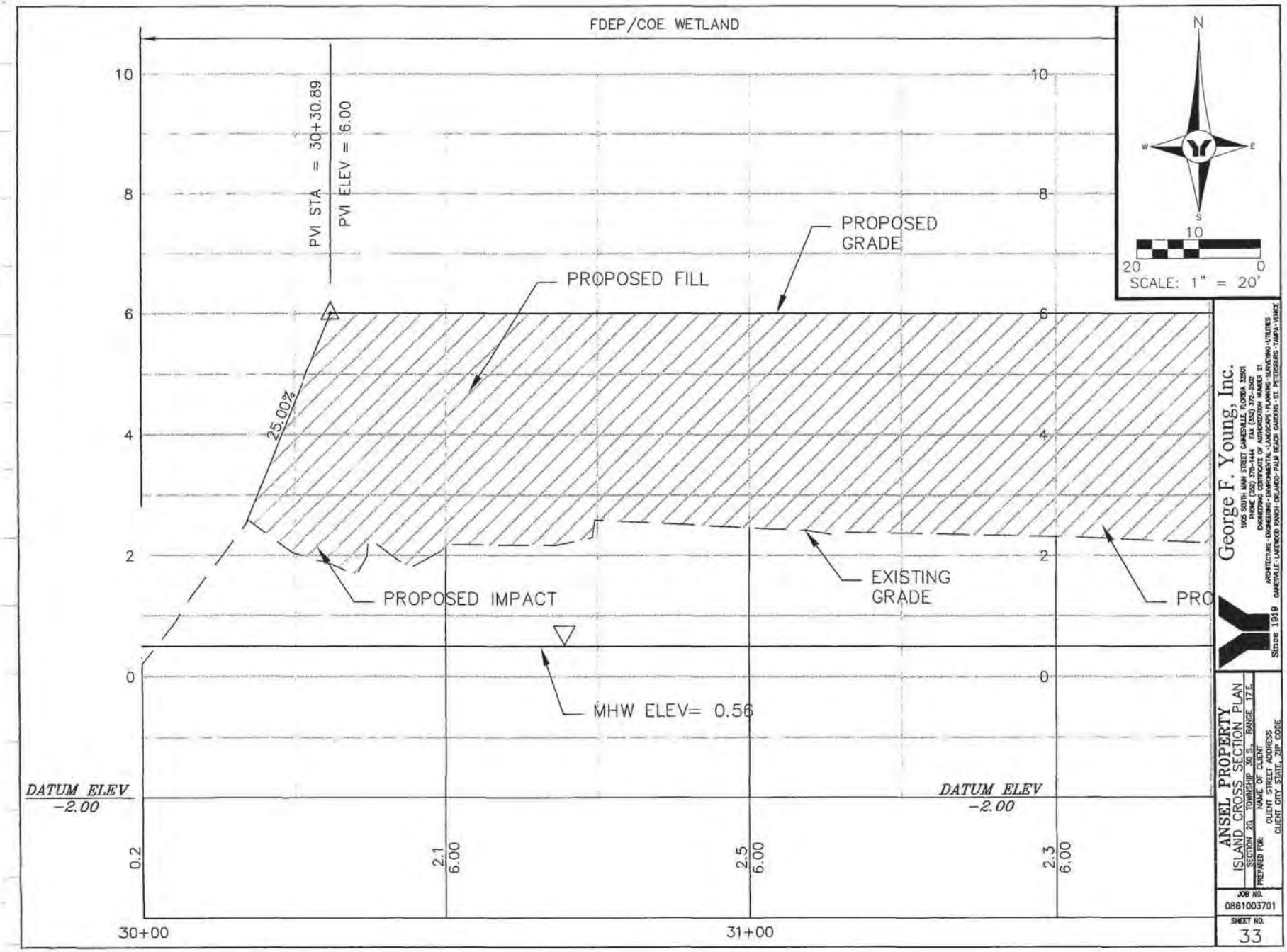
FDEP/COE WETLAND
PVI STA = 30+30.89
PVI ELEV = 6.00
PROPOSED GRADE
PROPOSED FILL
25.00%
PROPOSED IMPACT
EXISTING GRADE
PRO
MHW ELEV= 0.56
DATUM ELEV -2.00
DATUM ELEV -2.00
0.2
2.1 6.00
2.5 6.00
2.3 6.00
30+00
31+00
10
8
6
4
2
0
N
W
E
S
10
20
0
SCALE: 1" = 20'
George F. Young, Inc.
Since 1919
ANSEL PROPERTY
ISLAND CROSS SECTION PLAN
SECTION 20 TOWNSHIP 30 S. RANGE 17 E
PREPARED FOR: NAME OF CLIENT
CLIENT STREET ADDRESS
CLIENT CITY STATE, ZIP CODE
JOB NO.
0861003701
SHEET NO.
33

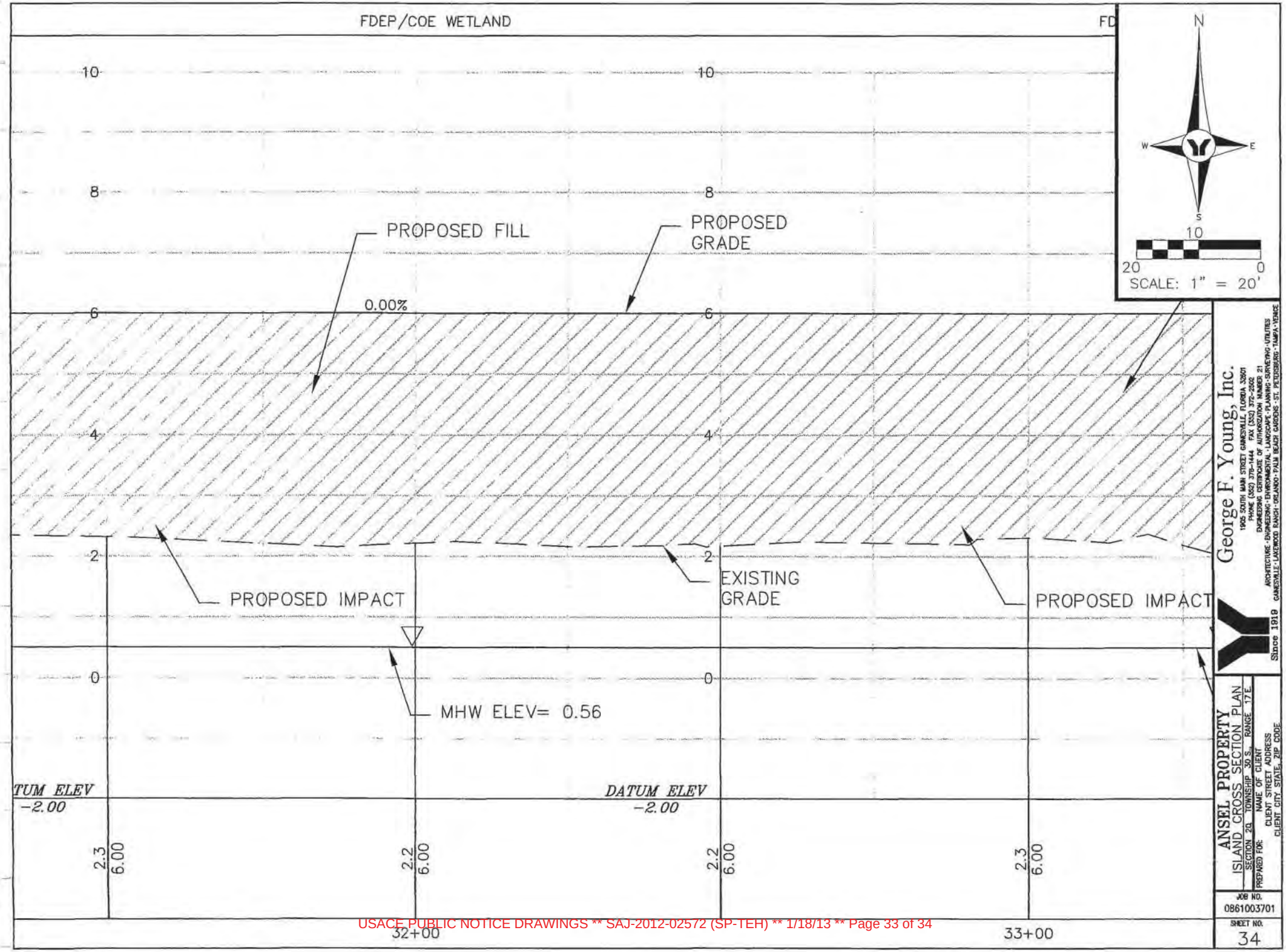
FDEP/COE WETLAND
FD
10
8
6
4
2
0
PROPOSED FILL
PROPOSED GRADE
0.00%
PROPOSED IMPACT
EXISTING GRADE
PROPOSED IMPACT
MHW ELEV= 0.56
DATUM ELEV -2.00
DATUM ELEV -2.00
2.3 6.00
2.2 6.00
2.2 6.00
2.3 6.00
32+00
33+00
N
W
E
S
10
20
0
SCALE: 1" = 20'
George F. Young, Inc.
1905 SOUTH MAIN STREET GAINESVILLE, FLORIDA 32601
PHONE (352) 376-1444 FAX (352) 372-2502
ENGINEERING CERTIFICATE OF AUTHORIZATION NUMBER 21
ARCHITECTURE-ENGINEERING-ENVIRONMENTAL-LANDSCAPE-PLANNING-SURVEYING-UTILITIES
GAINESVILLE-LAKEWOOD RANCH-ORLANDO-PALM BEACH GARDENS-ST. PETERSBURG-TAMPA-TENAFLY
Since 1919
ANSEL PROPERTY
ISLAND CROSS SECTION PLAN
SECTION 20 TOWNSHIP 30 S. RANGE 17 E.
PREPARED FOR:
NAME OF CLIENT
CLIENT STREET ADDRESS
CLIENT CITY STATE, ZIP CODE
JOB NO.
0861003701
SHEET NO.
34

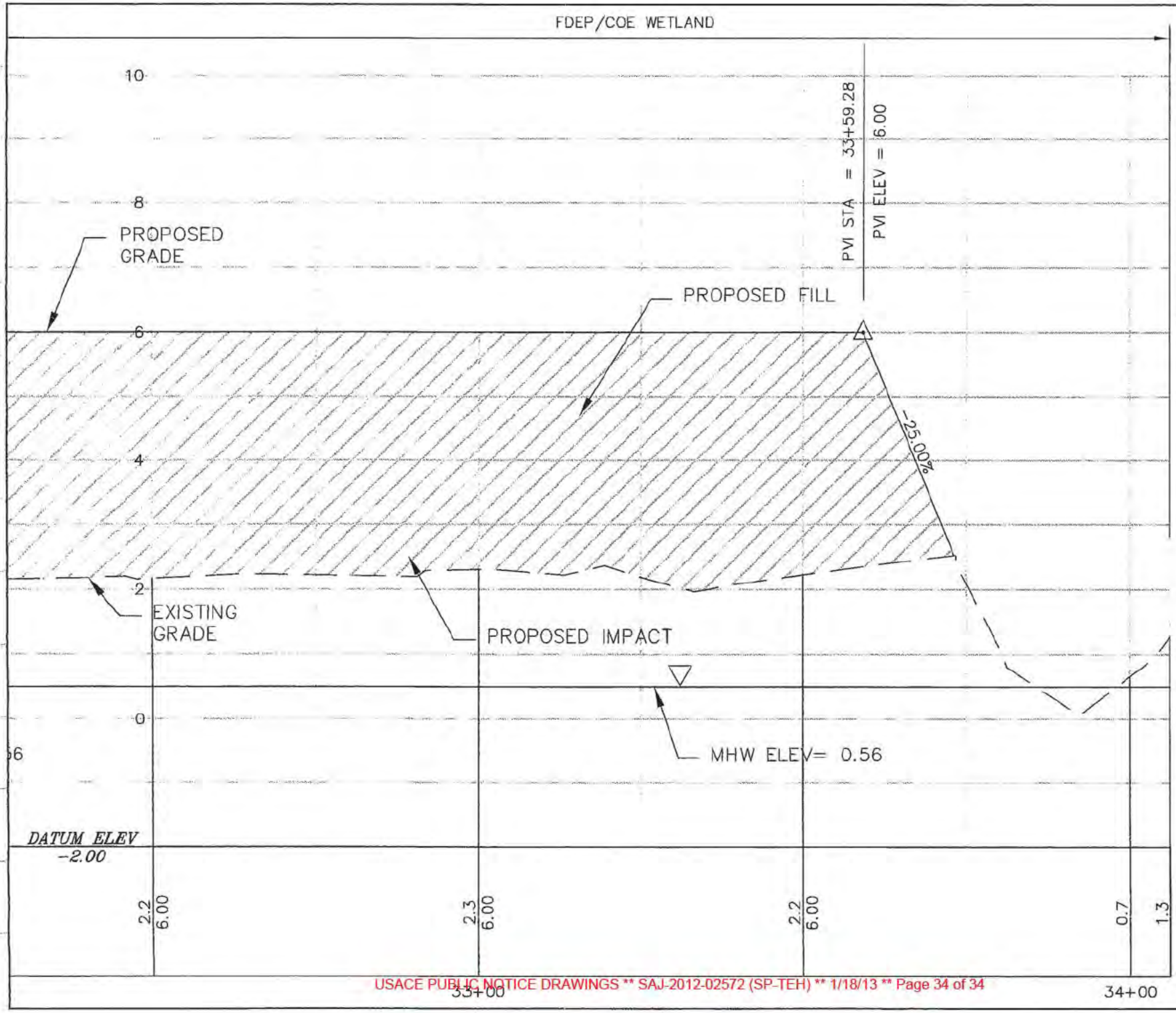

George F. Young, Inc.
1905 SOUTH MAIN STREET GAINESVILLE, FLORIDA 32601
PHONE (352) 378-1444 FAX (352) 372-2502
ENGINEERING CERTIFICATE OF AUTHORIZATION NUMBER 21
ARCHITECTURE · ENGINEERING · ENVIRONMENTAL · LANDSCAPE · PLANNING · SURVEYING · UTILITIES
GAINESVILLE · LAKEWOOD RANCH · ORLANDO · PALM BEACH GARDENS · ST. PETERSBURG · TAMPA · VENICE
Since 1919

ANSEL PROPERTY
ISLAND CROSS SECTION PLAN
SECTION 20 TOWNSHIP 30 S., RANGE 17 E.
PREPARED FOR:
NAME OF CLIENT
CLIENT STREET ADDRESS
CLIENT CITY, STATE, ZIP CODE

JOB NO.
0861003701
SHEET NO.
35