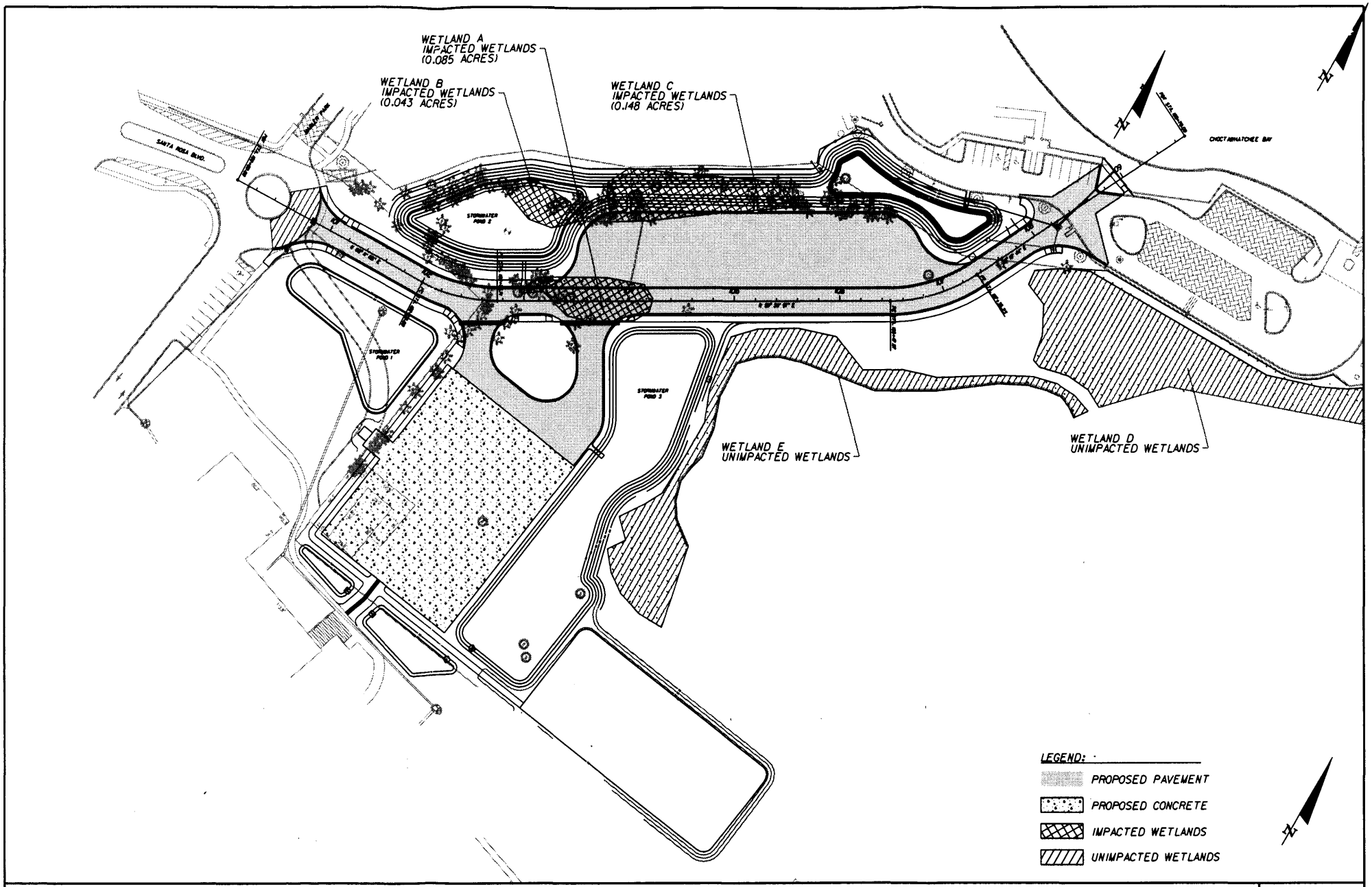

WETLAND LOCATION MAP

FIGURE 1

BOARD OF COUNTY COMMISSIONERS
OKALOOSA COUNTY, FLORIDA

PLANS PROPOSED FOR

MARLER PARK BOAT RAMP PARKING AND OUTDOOR EXHIBIT AREA

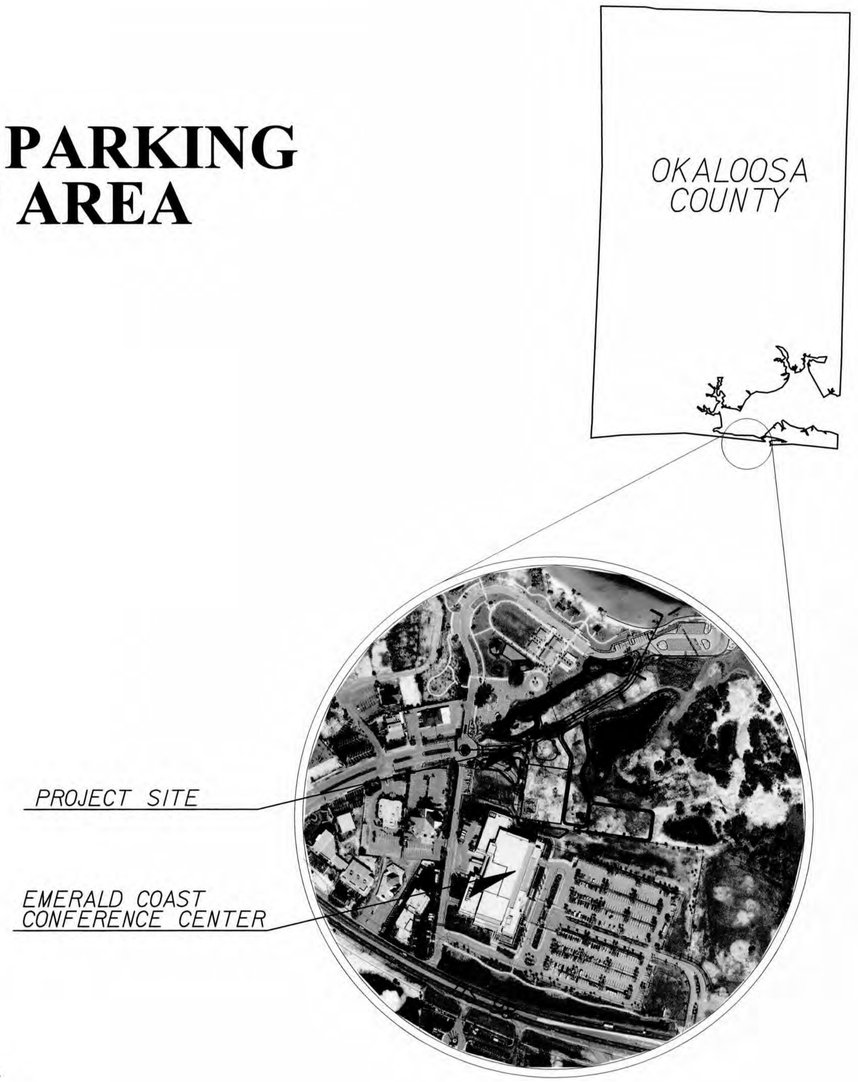

INDEX OF PLAN SHEETS

SHEET NO.	SHEET DESCRIPTION
C-100	COVER SHEET
C-101	GENERAL NOTES
C-102	SURVEY
C-103	TYPICAL SECTION
C-104	ROADWAY DETAILS
C-105	PROJECT CONTROL
C-106	DEMOLITION AND EROSION CONTROL
C-107	SITE PLAN
C-108	ROADWAY PROFILE
C-109 - 110	CROSS SECTIONS
C-111	DRAINAGE DESIGN
C-112	STORMWATER PONDS
C-113 - 114	STORMWATER POLLUTION PREVENTION PLAN
C-115	PAVEMENT AND STRIPING PLAN
C-116	TRAFFIC CONTROL PLAN
E-001	LIGHT GAUGE TRUSS DETAILS
E-100	ELECTRICAL LEGEND, DETAILS, & NOTES
E-200	ELECTRICAL PLANS
E-300	ELECTRICAL DETAILS
S-000	COMMUNICATION DETAILS
S-001	ISOMETRIC VIEW
S-002	STRUCTURAL GENERAL NOTES
S-100	STRUCTURAL ADDREVIATIONS & WIND DIAGRAM
S-101	FOUNDATION PLAN
S-200	ELECTRICAL BUILDING PLANS
S-201	SECTIONS & DETAILS
S-202	TYPICAL MASONRY DETAILS
W-100	WATER PLANS

PLANS PREPARED BY:

ATKINS

2114 Airport Blvd., Suite 1450 Pensacola, Florida 32504
Certificate of Authorization No. 24

THESE PLANS HAVE BEEN PREPARED IN ACCORDANCE WITH THE LATEST FDOT AND OKALOOSA COUNTY TECHNICAL SPECIFICATIONS.

80% PLANS SUBMITTAL
NOT FOR CONSTRUCTION
JULY 2012

RECEIVED
SEP 06 2012
NWFWMD

C-100

Kevin M. Morgan, P.E.
FL. Reg. NO. 71350

GENERAL NOTES:

1. THE CONTRACTORS SHALL NOTIFY OKALOOSA COUNTY ENGINEER AND EMERALD COAST CONFERENCE CENTER GENERAL MANAGER 48 HOURS PRIOR TO CONSTRUCTION.

2. ALL CONDITIONS AND STIPULATIONS OF THE CONSTRUCTION PERMITS AND THE APPROVALS ISSUED BY OKALOOSA COUNTY SHALL BE COMPLIED WITH IN EVERY DETAIL.

3. THE LOCATIONS SHOWN FOR EXISTING UNDERGROUND UTILITIES IS APPROXIMATE. THE CONTRACTOR SHALL DETERMINE THE EXACT LOCATION OF ALL EXISTING UTILITIES BEFORE COMMENCING WORK IN EACH AREA. THE CONTRACTOR AGREES TO BE COMPLETELY RESPONSIBLE FOR ALL DAMAGES WHICH MIGHT OCCUR BY HIS FAILURE TO EXACTLY LOCATE AND PRESERVE ALL UTILITIES.

4. ANY BUILDINGS, SIDEWALKS, ROADS AND ANY OTHER ITEMS NOT PART OF THE PLANS DAMAGED BY CONSTRUCTION OPERATIONS ARE TO BE PATCHED OR RECONSTRUCTED AS DIRECTED BY THE COUNTY ENGINEER OR EMERALD COAST CONFERENCE GENERAL MANAGER.

5. THE CONTRACTOR SHALL TAKE STEPS NECESSARY TO PREVENT EROSION AND ANY OFF SITE SEDIMENT TRANSPORT RESULTING FROM INCREASED RUNOFF DURING CONSTRUCTION BY PROVIDING SILT FENCE AND/OR STAKED HAY BALES AS REQUIRED BY FDOT INDEX 102, THE FLORIDA STORM WATER, EROSION, AND SEDIMENT CONTROL INSPECTORS MANUAL 2000 EDITION, OR AS INDICATED ON THE PLANS. ALL EROSION CONTROL MEASURES SHALL REMAIN IN PLACE UNTIL ASSOCIATED DISTURBED AREAS ARE STABILIZED SO AS TO REDUCE SEDIMENT RUNOFF, UNLESS OTHERWISE DIRECTED BY THE ENGINEER OR DESIGNEE.

6. ANY NECESSARY CONSTRUCTION PERMITS WILL BE THE RESPONSIBILITY OF THE CONTRACTOR. OKALOOSA COUNTY WILL OBTAIN THE REQUIRED STORMWATER PERMIT.

7. THE CONTRACTOR IS CAUTIONED TO VISIT THE SITE AND FAMILIARIZE HIMSELF WITH THE PROJECT PRIOR TO BIDDING AND/OR CONSTRUCTION.

8. EXISTING DRAINAGE FEATURES WITHIN CONSTRUCTION LIMITS SHALL NOT BE REMOVED UNLESS OTHERWISE NOTED IN PLANS.

9. THE CONTRACTOR IS TO USE CAUTION WHEN WORKING IN OR AROUND AREAS OF OVERHEAD ELECTRIC LINES AND UNDERGROUND UTILITIES.

10. ALL CONSTRUCTION SHALL COMPLY WITH THE OKALOOSA COUNTY AND FDOT TECHNICAL SPECIFICATIONS, LATEST EDITION.

11. ALL MATERIAL, TESTING AND CONSTRUCTION METHODS SHALL CONFORM TO THE OKALOOSA COUNTY AND FDOT TECHNICAL SPECIFICATIONS, LATEST EDITION.

12. THE CONTRACTOR SHALL NOT UTILIZE ANY OF THE EXISTING FACILITIES, INCLUDING THE CONFERENCE CENTER, BOAT RAMP, AND PARK FOR PARKING, STAGING OR OTHER CONSTRUCTION ACTIVITIES AT ANY TIME DURING CONSTRUCTION.

13. CONTRACTOR SHALL COMPLY WITH ALL F.D.E.P. AND ARMY CORP. OF ENGINEERS REQUIREMENTS.

14. VEGETATION WITHIN THE PROJECT AREA SHALL BE RESTORED TO ORIGINAL CONDITION VIA SODDING OF SLOPES, UNLESS OTHERWISE NOTED ON THE PLAN SHEETS. COST OF SAID RESTORATION SHALL BE CONSIDERED INCIDENTAL TO OTHER PAY ITEMS.

15. EXISTING UTILITIES TO REMAIN AND BE PROTECTED DURING CONSTRUCTION UNLESS SHOWN OTHERWISE.

16. ALL FLORIDA DEPARTMENT OF ENVIRONMENTAL PROTECTION, DIVISION OF STATE LANDS, BUREAU OF SURVEY AND MAPPING GPS NETWORK MONUMENTATION SHALL BE PROTECTED AT ALL TIMES. ANY DISTURBANCE TO SAID MONUMENTS SHALL BE REPLACED AT THE CONTRACTORS EXPENSE WITH NO COMPENSATION FROM THE COUNTY.

17. UTILITY OWNERS SHALL BE NOTIFIED AT LEAST 48 HOURS PRIOR TO ANY CONSTRUCTION BY CALLING SUNSHINE STATE ONE CALL 811 OR 800-432-4770 SO THAT THE UTILITY OWNER CAN SPOT VERIFY AND/OR EXPOSE THEIR UTILITIES. KNOWN UTILITIES OWNERS INCLUDE:

    SANITARY SEWER/WATER - OKALOOSA COUNTY WATER AND SEWER
    MR. JEFF LITTRELL
    PH: (850) 651-7136

    ELECTRIC - GULF POWER
    MR. MARK REEVES
    PH: (850) 689-4618

    TELEPHONE - EMBARQ
    MR. CRAIG CLARK
    PH: (850) 664-3763

    COX-COMMUNICATIONS-CABLE
    MR. ROGER DIXON
    PH: (850) 314-8163

18. ACCESS TO MARLER PARK, THE BOAT RAMP, AND SURROUNDING STREETS SHALL REMAIN OPEN AT ALL TIMES. THE CONTRACTOR SHALL BE ALLOWED TO CLOSE THE BOAT RAMP ONLY DURING DRAINAGE INSTALLATION AND SOME PAVING OPERATIONS. THE CONTRACTOR SHALL NOTIFY THE COUNTY ENGINEER OF THESE CONSTRUCTION ACTIVITIES ONE WEEK PRIOR TO WORK.

19. ALL EXCAVATED MATERIAL (SAND & SOIL) MUST REMAIN ON SANTA ROSA ISLAND. ALL EXCAVATED MATERIAL SHALL BE USED TO GRADE THE SODDED AREA DEPICTED IN THE PLANS, WITH THE REMAINING MATERIAL DELIVERED TO ANOTHER LOCATION AS DIRECTED BY THE COUNTY ENGINEER. THE COST TO EXCAVATE, TRANSPORT, AND RELOCATE ANY REMAINING MATERIAL SHALL BE INCLUDED IN THE COST OF THE EARTHWORK FOR THE PROJECT.

20. THE CONTRACTOR SHALL MATCH EXISTING CONDITIONS AT THE BEGINNING AND END OF THE CONSTRUCTION LIMITS AS DIRECTED BY THE COUNTY ENGINEER.

21. IT SHALL BE THE CONTRACTORS RESPONSIBILITY TO PRESERVE OR RELOCATE ALL BENCHMARKS AS NEEDED DURING CONSTRUCTION. ANY PUBLIC LAND CORNER MONUMENTS WITHIN THE LIMITS OF CONSTRUCTION SHALL BE PROTECTED. IF A CORNER MONUMENT IS IN DANGER OF BEING DESTROYED AND HAS NOT BEEN PROPERLY REFERENCED, THE CONTRACTOR SHALL NOTIFY THE ENGINEER OR DESIGNEE IMMEDIATELY.

    PLEASE CONTACT:

    DANIEL G. ROSS, PLS
    EMERALD COAST ASSOCIATES INC.
    4636 GULFSTARR DRIVE
    DESTIN, FLORIDA 32541 PH (850) 837-8242

22. THE CONTRACTOR SHALL CONTACT THE GENERAL MANAGER OF THE EMERALD COAST CONFERENCE CENTER AND THE COUNTY ENGINEER ONE WEEK PRIOR TO BEGINNING DEMOLITION TO REVIEW THE PROPOSED WORK SITE. THE CONTRACTOR SHALL CONTACT THE GENERAL MANAGER AT:

    PLEASE CONTACT:

    BILL LEAMAN
    GENERAL MANAGER
    EMERALD COAST CONFERENCE CENTER
    1250 MIRACLE STRIP PARKWAY, SE
    FORT WALTON BEACH, FLORIDA 32548
    PH (850) 609-3800

    JASON AUTREY, P.E.
    OKALOOSA COUNTY ENGINEER
    1759 S. FERDON BOULEVARD
    CRESTVIEW, FLORIDA 32536
    PH (850) 689-5772

STORMWATER NOTES:

1. THE CONTRACTOR SHALL PROVIDE TO OKALOOSA COUNTY AS-BUILT RECORD DRAWINGS FOR VERIFICATION AND APPROVAL BY OKALOOSA COUNTY ONE WEEK PRIOR TO REQUESTING A FINAL INSPECTION AND PROVIDING AS-BUILT CERTIFICATION THAT THE PROJECT CONSTRUCTION ADHERES TO THE PERMITTED PLANS AND SPECIFICATIONS. THE AS-BUILT RECORD DRAWINGS SHALL BE CLEARLY LABELED AS "AS-BUILT" OR "RECORD" DRAWING AND SHOW BOTH THE ORIGINAL DESIGN AND CONSTRUCTED CONDITION. ALL SURVEYED DIMENSIONS AND ELEVATIONS SHALL BE VERIFIED AND SIGNED, DATED, AND SEALED BY A REGISTERED PROFESSIONAL SURVEYOR. SEE STORMWATER PERMIT DOCUMENTATION FOR FURTHER CONTRACTOR REQUIREMENTS.

2. THE OWNER OR HIS AGENT SHALL ARRANGE/SCHEDULE WITH THE COUNTY A FINAL INSPECTION OF THE DEVELOPMENT UPON COMPLETION AND ANY INTERMEDIATE INSPECTIONS. AS-BUILT CERTIFICATION IS REQUIRED PRIOR TO REQUEST FOR FINAL INSPECTION/APPROVAL.

3. THE CONTRACTOR SHALL MAINTAIN RECORD DRAWINGS DURING CONSTRUCTION WHICH SHOW AS-BUILT CONDITIONS OF ALL WORK INCLUDING PIPING, DRAINAGE STRUCTURES, TOPO OF POND(S), OUTLET STRUCTURES, DIMENSIONS, ELEVATIONS, GRADING, ETC. RECORD DRAWINGS SHALL BE PROVIDED TO THE ENGINEER OF RECORD PRIOR TO REQUESTING FINAL INSPECTION.

4. NO DEVIATIONS OR REVISIONS FROM THESE PLANS BY THE CONTRACTOR SHALL BE ALLOWED WITHOUT PRIOR APPROVAL FROM BOTH THE DESIGN ENGINEER AND OKALOOSA COUNTY. ANY DEVIATIONS MAY RESULT IN DELAYS IN OBTAINING A CERTIFICATE OF OCCUPANCY.

6. RETENTION/DETENTION AREAS SHALL BE SUBSTANTIALLY COMPLETE PRIOR TO ANY CONSTRUCTION ACTIVITIES THAT MAY INCREASE STORMWATER RUNOFF RATES. THE CONTRACTOR SHALL CONTROL STORMWATER DURING ALL PHASES OF CONSTRUCTION AND TAKE ADEQUATE MEASURES TO PREVENT THE EXCAVATED POND FROM BLINDING DUE TO SEDIMENTS.

7. ALL DISTURBED AREAS WHICH ARE NOT PAVED SHALL BE STABILIZED WITH SOD.

8. THE CONTRACTOR SHALL RESHAPE PER PLAN SPECIFICATIONS, CLEAN OUT ACCUMULATED SILT, AND STABILIZE RETENTION/DETENTION POND(S) AT THE END OF CONSTRUCTION WHEN ALL DISTURBED AREAS HAVE BEEN STABILIZED AND PRIOR TO FINAL INSPECTION.

9. NOTIFY SUNSHINE UTILITIES 48 HOURS IN ADVANCE PRIOR TO DIGGING WITHIN R/W; 1-800-432-4770.

RECEIVED
SEP 06 2012

NUMBER	REVISIONS	DATE	APPROVED BY

MARLER PARK BOAT RAMP PARKING AND OUTDOOR EXHIBIT AREA

GENERAL NOTES

ATKINS
2114 Airport Blvd., Suite 1450 Pensacola, Florida 32504
Phone No. 850.478.9844

ENGINEER OF RECORD
K.M. MORGAN
LICENSE No. 71356
STATE OF FLORIDA
PROFESSIONAL ENGINEER

SCALE:	
DRAWN BY:	K.M.M.
DESIGNED BY:	K.M.M.
CHECKED BY:	K.A.W.
APPROVED BY:	J.C.H.
PROJECT NUMBER	100024290
DRAWING NUMBER	C-101

T:\Emerald Coast Conference Center\00004695\roadway\General Notes Sheet.dgn 7/20/2012 5:10:08 PM 22/10

GRAPHIC SCALE

0 25 50 100

(IN FEET)
1 inch = 50 ft.

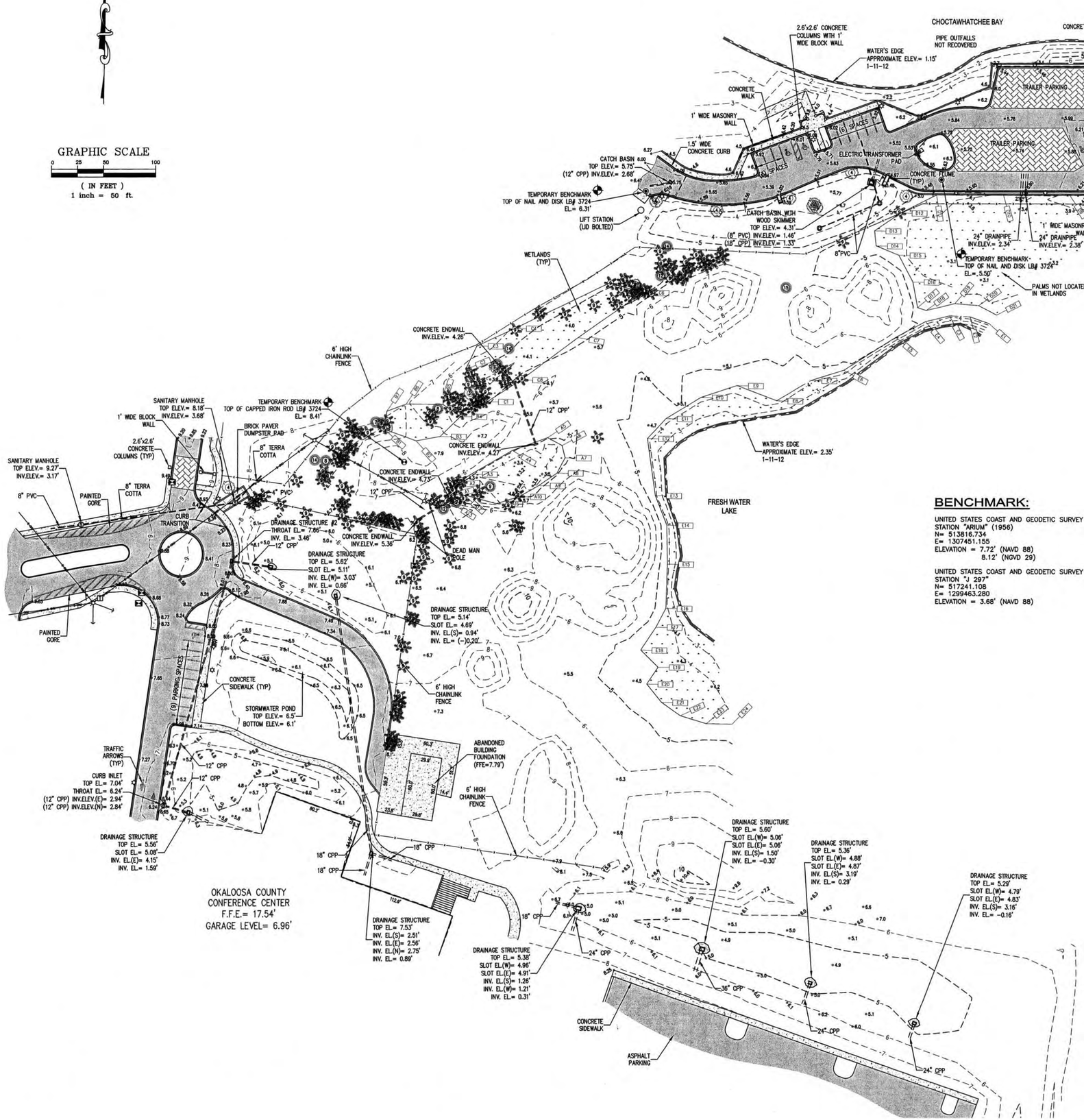

LEGEND:

- No. = NUMBER
- # = NUMBER
- L.B. = LICENSED BUSINESS
- L.S. = LICENSED SURVEYOR
- INV. = INVERT
- ELEV. = ELEVATION
- (TYP.) = TYPICAL
- F.F.E. = FINISHED FLOOR ELEVATION
- ± = MORE OR LESS
- S.F. = SQUARE FEET
- +10.56 = SPOT ELEVATION AT "DOT"
- —10— = CONTOUR ELEVATION AT 0.5' INTERVALS
- —/\/— = DISTANCE NOT TO SCALE
- PVC = POLYVINYL CHLORIDE
- C.M.P. = CORRUGATED METAL PIPE
- C.P.P. = CORRUGATED PLASTIC PIPE
- R.C.P. = REINFORCED CONCRETE PIPE
- NGVD 29 = NATIONAL GEODETIC VERTICAL DATUM 1929
- NAVD 88 = NORTH AMERICAN VERTICAL DATUM 1988
- = FOUND 1/2" CAPPED IRON ROD L.B. #3724 TRAVERSE
- = SET NAIL AND DISK L.B. #3724 TRAVERSE
- = SEWER MANHOLE
- = JURISDICTIONAL FLAG
- = LAMP POLE
- = HANDICAPPED PARKING SPACE
- = WATER VALVE
- = WATER METER
- = FIRE HYDRANT
- = GUY ANCHOR
- = UTILITY POLE
- = CLEAN-OUT
- = IRRIGATION VALVE
- = ASPHALT
- = ROCK RIP-RAP
- = CONCRETE
- = BRICK PAVERS
- = WOOD
- = WETLANDS
- = OAK TREE (DIAMETER SHOWN IN INCHES)
- = PINE TREE (DIAMETER SHOWN IN INCHES)
- = PALM TREE (DIAMETER SHOWN IN INCHES) (APPROXIMATE)
- = POPCORN TREE (DIAMETER SHOWN IN INCHES)
- = CEDAR TREE (DIAMETER SHOWN IN INCHES)

BENCHMARK:

UNITED STATES COAST AND GEODETIC SURVEY
STATION "ARIUM" (1956)
N= 513816.734
E= 1307451.155
ELEVATION = 7.72' (NAVD 88)
8.12' (NGVD 29)

UNITED STATES COAST AND GEODETIC SURVEY
STATION "J 297"
N= 517241.108
E= 1299463.280
ELEVATION = 3.68' (NAVD 88)

SURVEY REPORT:

1. ENVIRONMENTAL JURISDICTION LINES SHOWN HEREON AS FLAGGED BY OTHERS.
2. THIS SURVEY WAS PERFORMED WITHOUT THE BENEFIT OF A CURRENT ABSTRACT OF TITLE OR TITLE INSURANCE POLICY. NO SEARCH OF THE PUBLIC RECORDS WAS PERFORMED BY EMERALD COAST ASSOCIATES INC. NO CERTIFICATION IS GIVEN THAT EASEMENTS, UNDERGROUND ENCROACHMENTS OR OTHER MATTERS OF RECORD DO NOT EXIST.
3. THERE MAY BE ADDITIONAL RESTRICTIONS THAT ARE NOT SHOWN ON THIS SURVEY THAT MAY BE FOUND IN THE PUBLIC RECORDS OF OKALOOSA COUNTY, FLORIDA.
4. APPARENT USES ARE AS SHOWN.
5. NO STRUCTURAL FOUNDATIONS BELOW THE SURFACE OF THE GROUND WERE LOCATED.
6. GRAPHIC SYMBOLISM OF CORNER MONUMENTATION, UTILITIES, SIGNS, ETCETERA, ARE EXAGGERATED FOR CLARITY AND ARE NOT TO SCALE. THE CENTER POINT OF WHICH IS ACCURATELY PLOTTED TO SCALE AND/OR DIMENSIONED THERETO.
7. NO UNDERGROUND UTILITIES OR UTILITY LINES WERE LOCATED.
8. ELEVATIONS SHOWN HEREON ARE BASED ON NATIONAL GEODETIC VERTICAL DATUM (1929).

RECEIVED
SEP 06 2012
NWFWMD

www.eca-fl.com
Emerald Coast Associates
Land Planning • Engineering • Surveying
Since 1970

TOPOGRAPHIC SURVEY

STORMWATER SYSTEM DETAIL OF OKALOOSA CONVENTION CENTER, DESTIN, FLORIDA

DATE	REVISION	CHECK BY:
4-5-12	ADDED PIPES AND TREES - WJL	

THE SURVEY SHOWN HEREON, PREPARED IN ACCORDANCE WITH SECTION 472.027 FLORIDA STATUTES AND CHAPTER 5J-17.051 AND 5J-17.052, FLORIDA ADMINISTRATIVE CODE, MINIMUM TECHNICAL STANDARDS; IS TRUE AND CORRECT TO THE BEST OF MY KNOWLEDGE AND IS NOT VALID WITHOUT THE SIGNATURE AND THE ORIGINAL RAISED SEAL OF A FLORIDA LICENSED SURVEYOR AND MAPPER.

PROJECT: 12-00

DRAWN BY: W.J.L.	SCA
DWG. DATE: 1-17-12	ORD
FIELD DATE: 1-11-12	PRO
FIELD BOOK(S): 1913, PAGES 14-24 (RH)	

SHEET

.00212-0003-SUR-Topographic Survey_Master Boat Ramp\Drawing\12-0027_SP.dwg, LAYOUT1, Bill, Apr 05, 2012 - 5:04:38pm

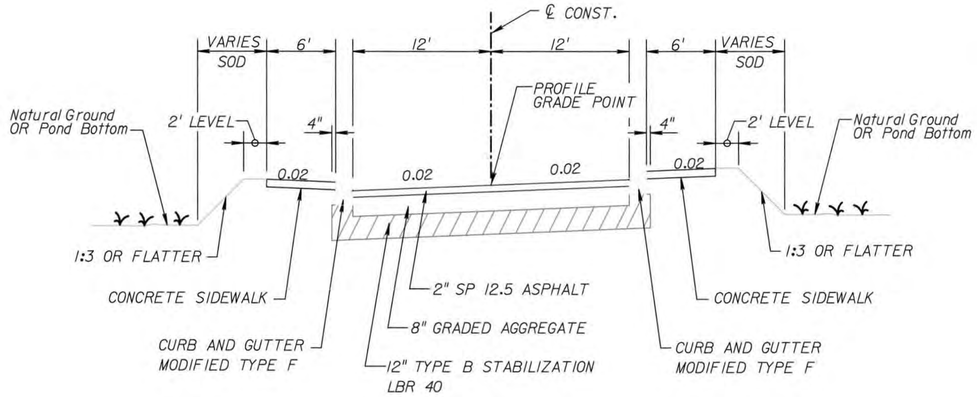

TYPICAL SECTION NO. 1
STA. 100+82.00 TO STA. 103+40.00
STA. 107+40.00 TO STA. 108+20.00

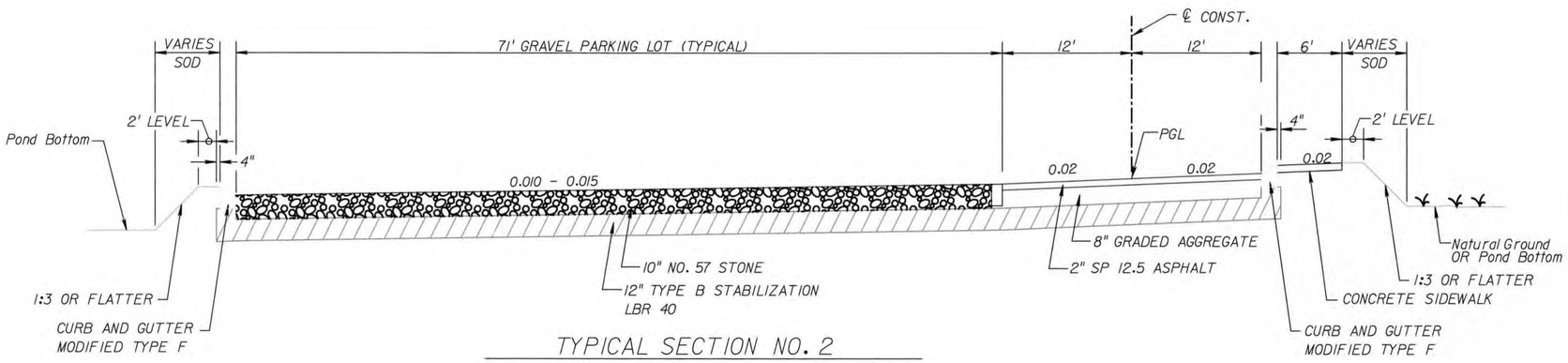

TYPICAL SECTION NO. 2
STA. 103+40.00 TO STA. 107+40.00

RECEIVED
SEP 06 2012
NWFWMD

NUMBER	REVISIONS	DATE	APPROVED BY

MARLER PARK BOAT RAMP PARKING AND OUTDOOR EXHIBIT AREA

ROADWAY TYPICAL SECTION

ATKINS
2114 Airport Blvd., Suite 1450 Pensacola, Florida 32504
Phone No. 850.478.9844

ENGINEER OF RECORD
KIMBERLY M. MORGAN
LICENSE NO. 71350
STATE OF FLORIDA
FL PE NO. 71350

SCALE:	
DRAWN BY:	K.M.M.
DESIGNED BY:	K.M.M.
CHECKED BY:	K.A.W.
APPROVED BY:	J.C.H.
PROJECT NUMBER	100024290
DRAWING NUMBER	C-103

22110 7/23/2012 7:39:15 AM T:\Emerald Coast Conference Center\00004695\roadway\Typical Sheet.dgn

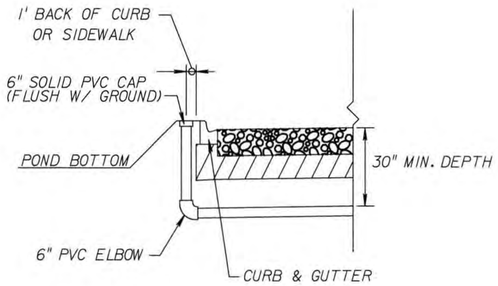

6" PVC CONDUIT DETAIL (STA. 104+60)
N.T.S.

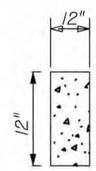

RIBBON CURB DETAIL
N.T.S.

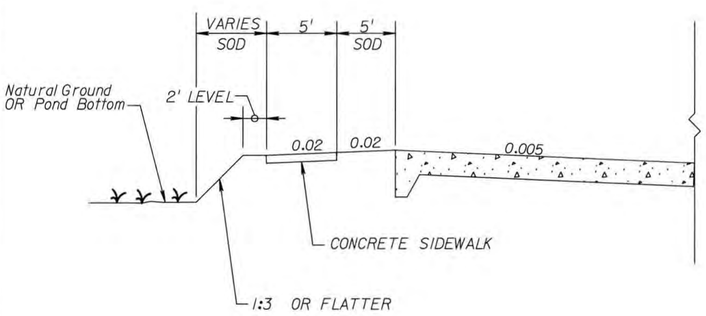

CONCRETE SLAB SIDEWALK DETAIL
N.T.S.

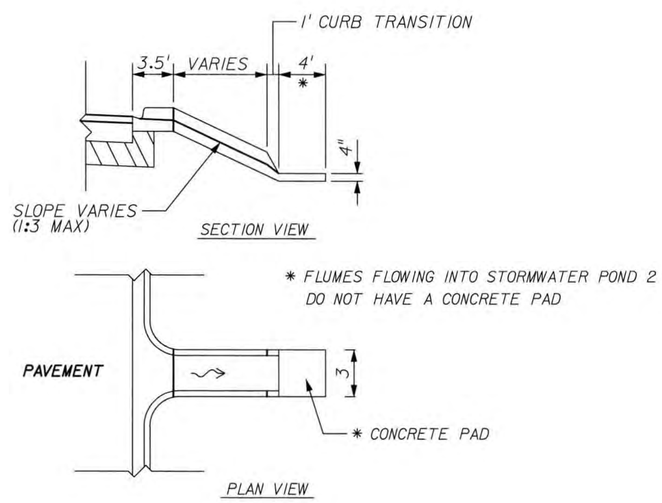

CONCRETE FLUME DETAIL
N.T.S.

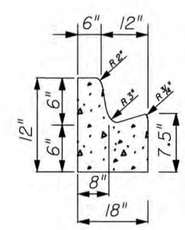

NOTE: WHEN USED ON HIGH SIDE OF ROADWAYS, THE CROSS SLOPE OF THE GUTTER SHALL MATCH THE CROSS SLOPE OF THE ADJACENT PAVEMENT. THE THICKNESS OF THE LIP SHALL BE 6 INCHES, UNLESS OTHERWISE SHOWN ON PLANS.

MODIFIED TYPE F CURB DETAIL
N.T.S.

RECEIVED
SEP 06 2012
NWFWMD

NUMBER	REVISIONS	DATE	APPROVED BY

MARLER PARK BOAT RAMP PARKING
AND OUTDOOR EXHIBIT AREA

ROADWAY DETAILS

ATKINS
2114 Airport Blvd., Suite 1450 Pensacola, Florida 32504
Phone No. 850.478.9844

ENGINEER OF RECORD
KEVIN M. MORGAN
LICENSE
No. 71350
STATE OF FLORIDA
NOT VALID WITHOUT THE SIGNATURE AND ORIGINAL RAISED SEAL OF A FLORIDA LICENSED ENGINEER

SCALE:	1 IN = 40 FT.
DRAWN BY:	K.M.M.
DESIGNED BY:	K.M.M.
CHECKED BY:	K.A.W.
APPROVED BY:	J.C.H.
PROJECT NUMBER	100024290
DRAWING NUMBER	C-104

T:\Emerald Coast Conference Center\00004695\roadway\Typical Sheet.dgn 7/23/2012 9:49:29 AM 22110

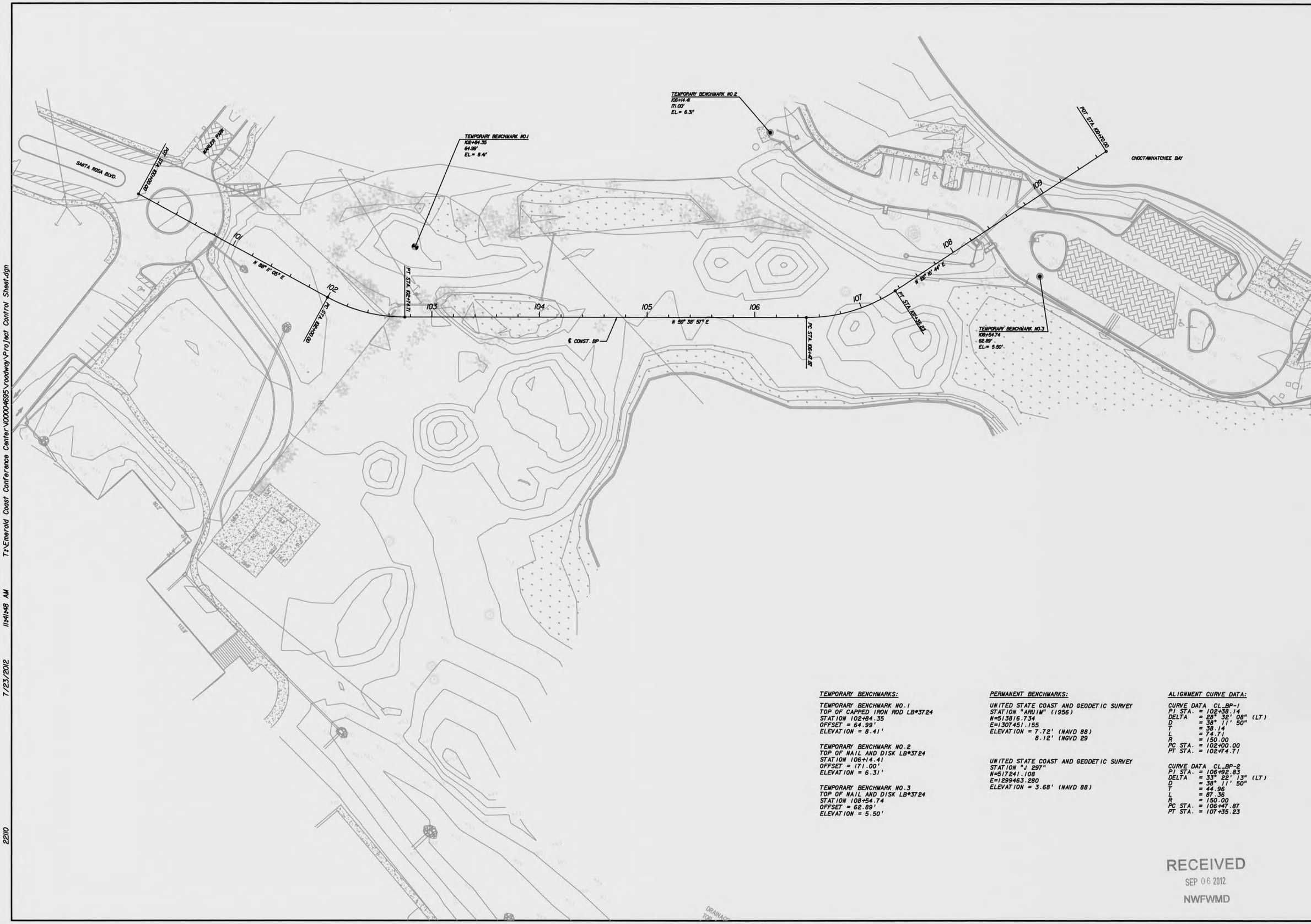

TEMPORARY BENCHMARKS:

TEMPORARY BENCHMARK NO.1
TOP OF CAPPED IRON ROD LB#3724
STATION 102+84.35
OFFSET = 64.99'
ELEVATION = 8.41'

TEMPORARY BENCHMARK NO.2
TOP OF NAIL AND DISK LB#3724
STATION 106+14.41
OFFSET = 171.00'
ELEVATION = 6.31'

TEMPORARY BENCHMARK NO.3
TOP OF NAIL AND DISK LB#3724
STATION 108+54.74
OFFSET = 62.89'
ELEVATION = 5.50'

PERMANENT BENCHMARKS:

UNITED STATE COAST AND GEODETIC SURVEY
STATION "ARUIM" (1956)
N=513816.734
E=1307451.155
ELEVATION = 7.72' (NAVD 88)
8.12' (NGVD 29

UNITED STATE COAST AND GEODETIC SURVEY
STATION "J 297"
N=517241.108
E=1299463.280
ELEVATION = 3.68' (NAVD 88)

ALIGNMENT CURVE DATA:

CURVE DATA CL.BP-1
PI STA. = 102+38.14
DELTA = 28° 32' 08" (LT)
D = 38° 11' 50"
T = 38.14
L = 74.71
R = 150.00
PC STA. = 102+00.00
PT STA. = 102+74.71

CURVE DATA CL.BP-2
PI STA. = 106+92.83
DELTA = 33° 22' 13" (LT)
D = 38° 11' 50"
T = 44.96
L = 87.36
R = 150.00
PC STA. = 106+47.87
PT STA. = 107+35.23

RECEIVED
SEP 06 2012
NWFWMD

NUMBER	REVISIONS	DATE	APPROVED BY

MARLER PARK BOAT RAMP PARKING AND OUTDOOR EXHIBIT AREA

PROJECT CONTROL

ATKINS
2114 Airport Blvd., Suite 1450, Pensacola, Florida 32504
Phone No. 850.478.9844

ENGINEER OF RECORD
KEVIN A. MORGAN
LICENSE
No. 71359
STATE OF FLORIDA
PROFESSIONAL ENGINEER

SCALE:	1 IN = 40 FT.
DRAWN BY:	K.M.M.
DESIGNED BY:	K.M.M.
CHECKED BY:	K.A.W.
APPROVED BY:	J.C.H.
PROJECT NUMBER	100024290
DRAWING NUMBER	C-105

T:\Emerald Coast Conference Center\00004695\roadway\Project Control Sheet.dgn 7/23/2012 11:41:48 AM 22110

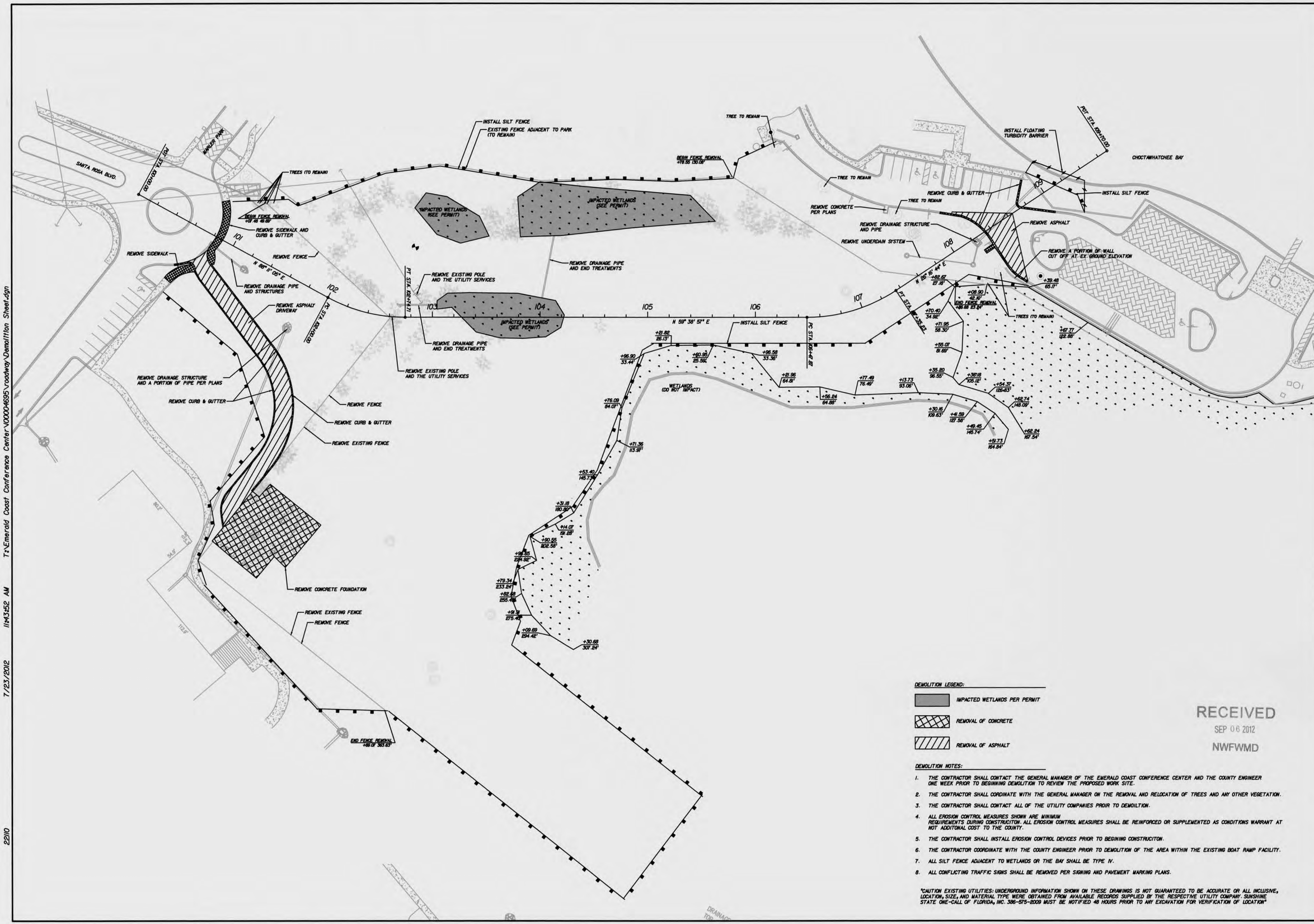

DEMOLITION LEGEND:

- IMPACTED WETLANDS PER PERMIT
- REMOVAL OF CONCRETE
- REMOVAL OF ASPHALT

RECEIVED
SEP 06 2012
NWFWMD

DEMOLITION NOTES:

1. THE CONTRACTOR SHALL CONTACT THE GENERAL MANAGER OF THE EMERALD COAST CONFERENCE CENTER AND THE COUNTY ENGINEER ONE WEEK PRIOR TO BEGINNING DEMOLITION TO REVIEW THE PROPOSED WORK SITE.
2. THE CONTRACTOR SHALL CORDINATE WITH THE GENERAL MANAGER ON THE REMOVAL AND RELOCATION OF TREES AND ANY OTHER VEGETATION.
3. THE CONTRACTOR SHALL CONTACT ALL OF THE UTILITY COMPANIES PRIOR TO DEMOILTION.
4. ALL EROSION CONTROL MEASURES SHOWN ARE MINIMUM REQUIREMENTS DURING CONSTRUCITON. ALL EROSION CONTROL MEASURES SHALL BE REINFORCED OR SUPPLEMENTED AS CONDITIONS WARRANT AT NOT ADDITONAL COST TO THE COUNTY.
5. THE CONTRACTOR SHALL INSTALL EROSION CONTROL DEVICES PRIOR TO BEGINING CONSTRUCITON.
6. THE CONTRACTOR COORDINATE WITH THE COUNTY ENGINEER PRIOR TO DEMOLITION OF THE AREA WITHIN THE EXISTING BOAT RAMP FACILITY.
7. ALL SILT FENCE ADJACENT TO WETLANDS OR THE BAY SHALL BE TYPE IV.
8. ALL CONFLICTING TRAFFIC SIGNS SHALL BE REMOVED PER SIGNING AND PAVEMENT MARKING PLANS.

"CAUTION EXISTING UTILITIES: UNDERGROUND INFORMATION SHOWN ON THESE DRAWINGS IS NOT GUARANTEED TO BE ACCURATE OR ALL INCLUSIVE, LOCATION, SIZE, AND MATERIAL TYPE WERE OBTAINED FROM AVAILABLE RECORDS SUPPLIED BY THE RESPECTIVE UTILITY COMPANY. SUNSHINE STATE ONE-CALL OF FLORIDA, INC. 386-575-2009 MUST BE NOTIFIED 48 HOURS PRIOR TO ANY EXCAVATION FOR VERIFICATION OF LOCATION"

NUMBER	REVISIONS	DATE	APPROVED BY

MARLER PARK BOAT RAMP PARKING AND OUTDOOR EXHIBIT AREA

DEMOLITION PLAN

ATKINS
2114 Airport Blvd., Suite 1450 Pensacola, Florida 32504
Phone No. 850.478.9844

ENGINEER OF RECORD
KENNETH M. MORGAN
LICENSE No. 71350
STATE OF FLORIDA
PROFESSIONAL ENGINEER

SCALE:	1 IN = 40 FT.
DRAWN BY:	K.M.M.
DESIGNED BY:	K.M.M.
CHECKED BY:	K.A.W.
APPROVED BY:	J.C.H.
PROJECT NUMBER	100024290
DRAWING NUMBER	C-106

T:\Emerald Coast Conference Center\100004695\roadway\Demolition Sheet.dgn 7/23/2012 11:43:52 AM 22110

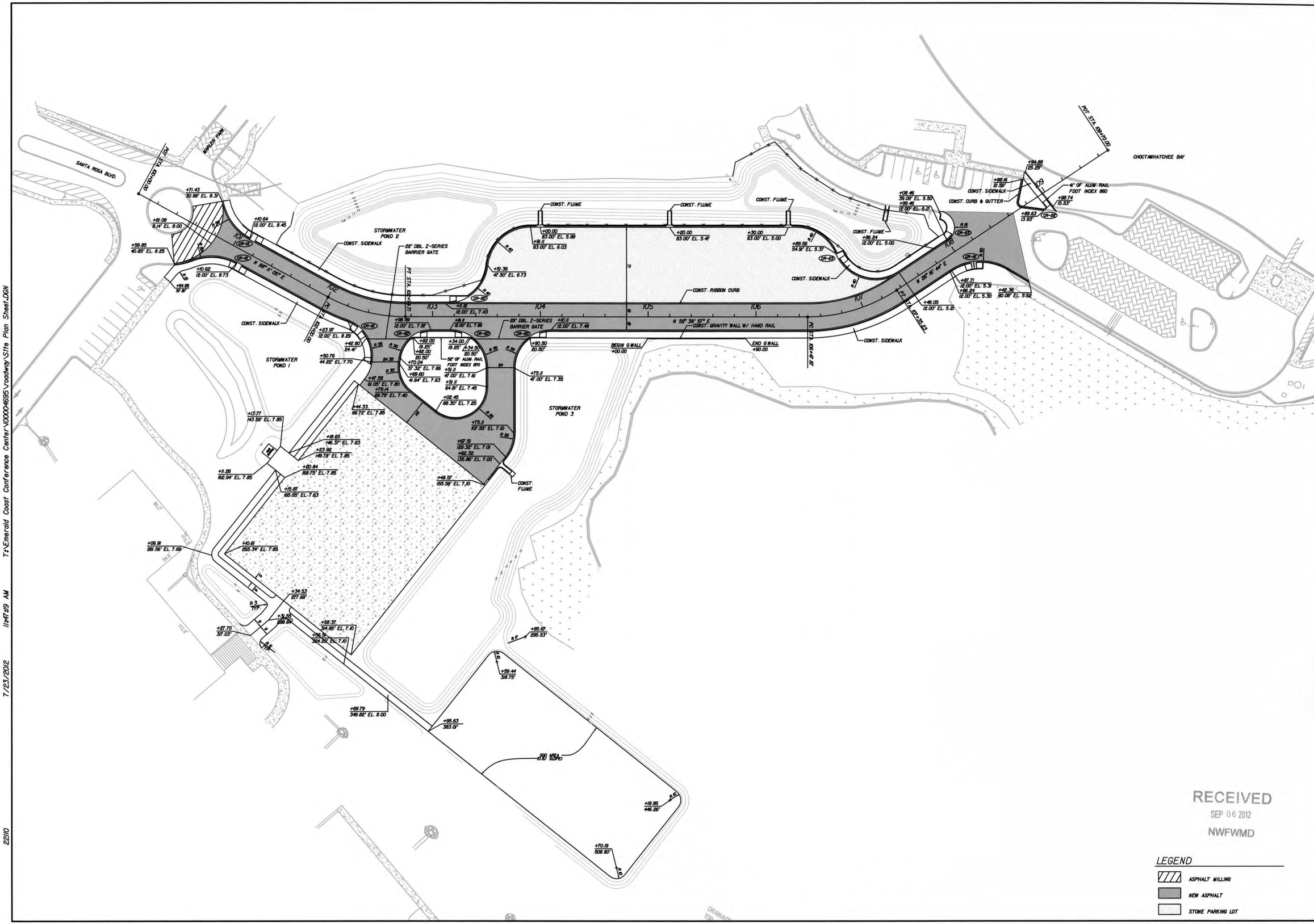

RECEIVED
SEP 06 2012
NWFWMD

LEGEND

- ASPHALT MILLING
- NEW ASPHALT
- STONE PARKING LOT

NUMBER	REVISIONS	DATE	APPROVED BY

MARLER PARK BOAT RAMP PARKING AND OUTDOOR EXHIBIT AREA

SITE PLAN

ATKINS
2114 Airport Blvd., Suite 1450 Pensacola, Florida 32504
Phone No. 850.478.9844

ENGINEER OF RECORD
KEVIN M. MORGAN
LICENSE No. 71950
STATE OF FLORIDA

SCALE:	1 IN = 40 FT.
DRAWN BY:	K.M.M.
DESIGNED BY:	K.M.M.
CHECKED BY:	K.A.W.
APPROVED BY:	J.C.H.
PROJECT NUMBER	100024290
DRAWING NUMBER	C-107

T:\Emerald Coast Conference Center\100004695\roadway\Site Plan Sheet.DGN 11:47:19 AM 7/23/2012 22110

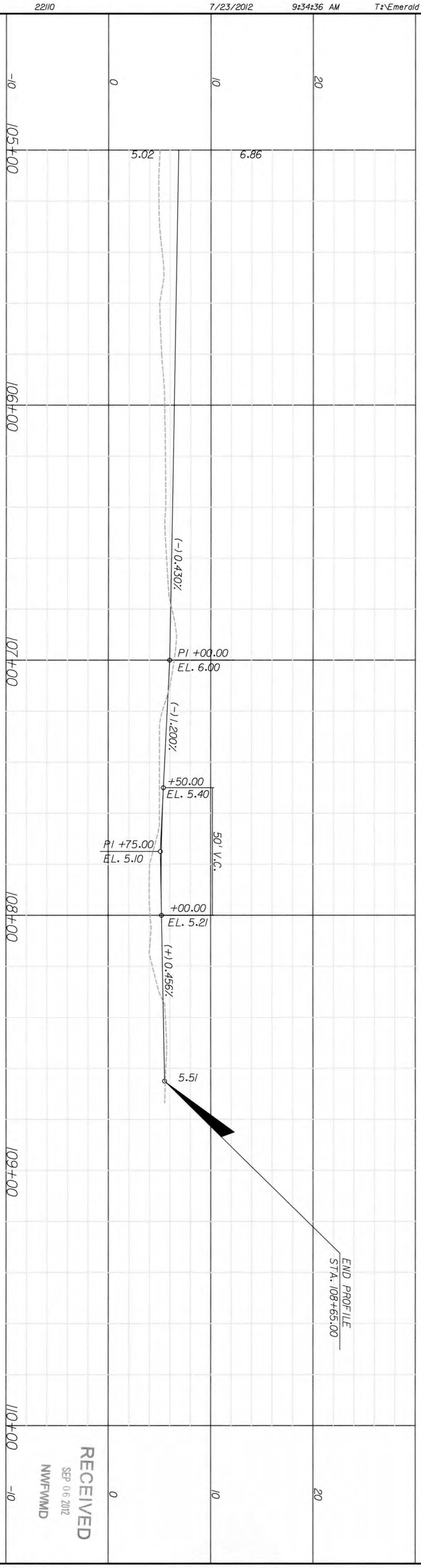

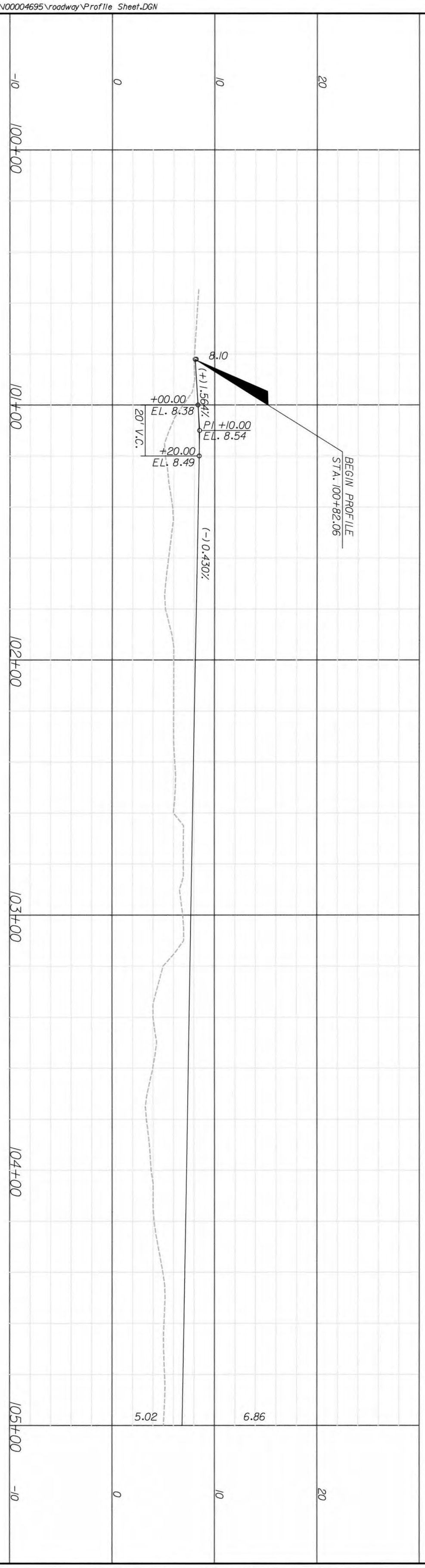

RECEIVED
SEP 06 2012
NWFWMD

SCALE: 1 IN = 20 FT.
DRAWN BY: K.M.M.
DESIGNED BY: K.M.M.
CHECKED BY: K.A.W.
APPROVED BY: J.C.H.
PROJECT NUMBER 100024290
DRAWING NUMBER C-108

KEVIN M. MORGAN LICENSE No. 71350 STATE OF FLORIDA PROFESSIONAL ENGINEER
ENGINEER OF RECORD
Kevin M. Morgan, P.E.
Fla. P.E. No. 71350

ATKINS
2114 Airport Blvd., Suite 1450 Pensacola, Florida 32504
Phone No. 850.478.9844

MARLER PARK BOAT RAMP PARKING AND OUTDOOR EXHIBIT AREA

ROADWAY PROFILE

NUMBER	REVISIONS	DATE	APPROVED BY

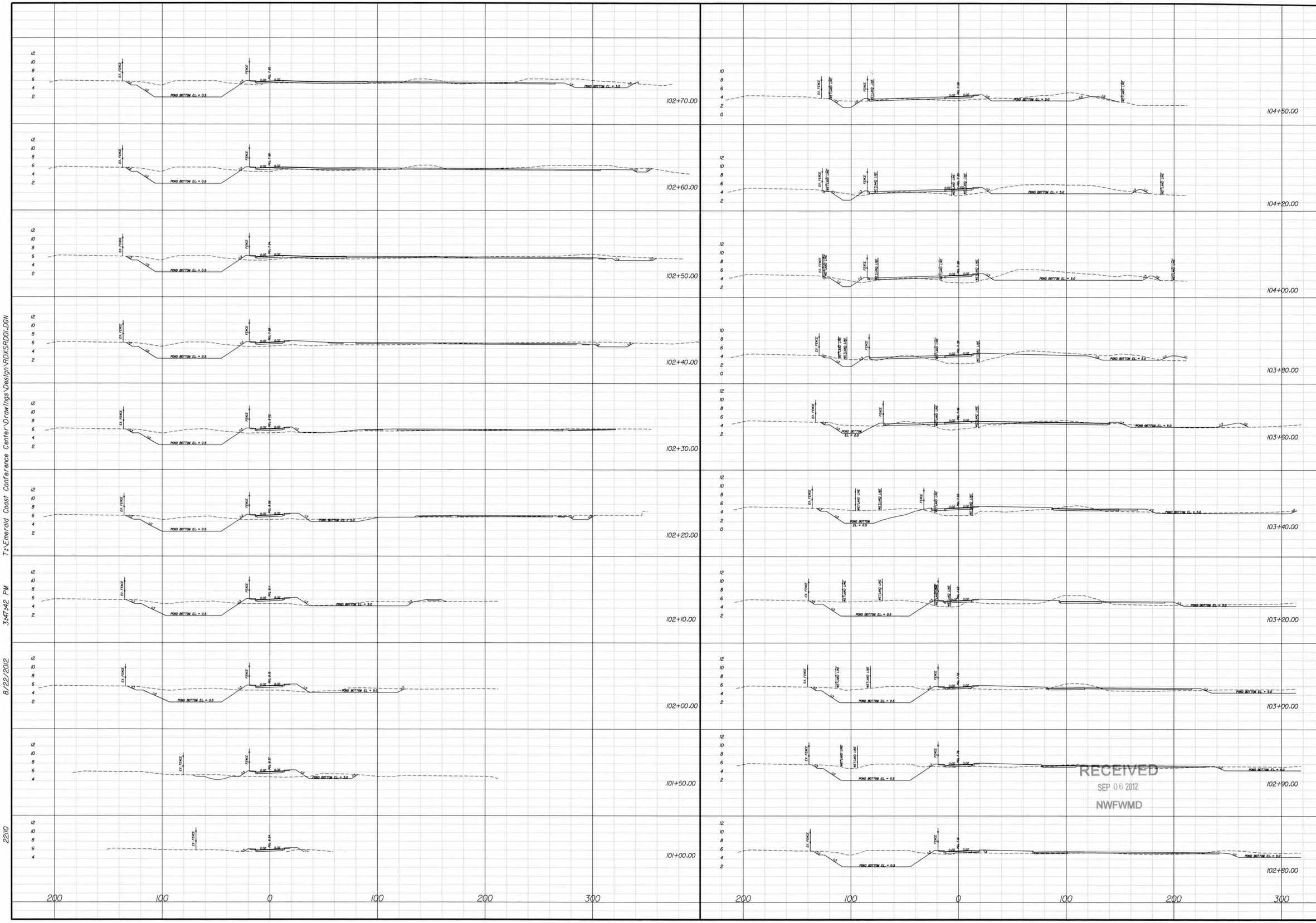

RECEIVED
SEP 06 2012
NWFWMD

NUMBER	REVISIONS	DATE	APPROVED BY

MARLER PARK BOAT RAMP PARKING AND OUTDOOR EXHIBIT AREA

CROSS SECTIONS

ATKINS
2114 Airport Blvd., Suite 1450, Pensacola, Florida 32504
Phone No. 850-478-9944

SCALE:	1 IN = 80 FT.
DRAWN BY:	K.M.M.
DESIGNED BY:	K.M.M.
CHECKED BY:	K.A.W.
APPROVED BY:	J.C.H.
PROJECT NUMBER	100024290
DRAWING NUMBER	C-109

T:\Emerald Coast Conference Center\Drawings\Design\RDXSRD01.DGN
8/22/2012 3:47:42 PM
22110

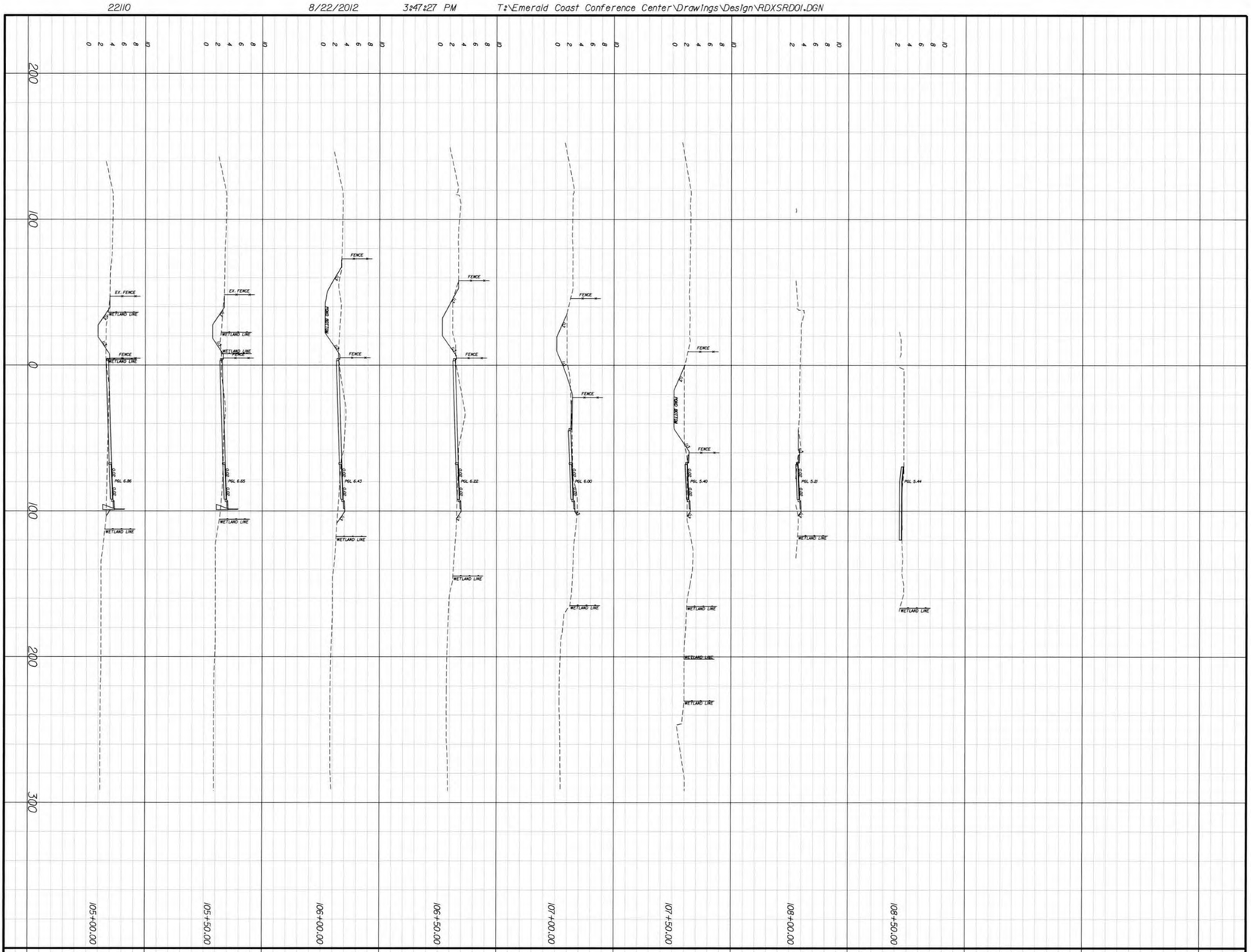

RECEIVED
SEP 06 2012
NWFWMD

SCALE:	1 IN = 80 FT.
DRAWN BY:	K.M.M.
DESIGNED BY:	K.M.M.
CHECKED BY:	K.A.W.
APPROVED BY:	J.C.H.
PROJECT NUMBER	100024290
DRAWING NUMBER	C-110

WILLIAM M. MORGAN LICENSE No. 71350 STATE OF FLORIDA PROFESSIONAL ENGINEER

ENGINEERS OF RECORD

ATKINS

2114 Airport Blvd., Suite 1450 Pensacola, Florida 32504
Phone No. 850.478.9844

MARLER PARK BOAT RAMP PARKING AND OUTDOOR EXHIBIT AREA

CROSS SECTIONS

NUMBER	REVISIONS	DATE	APPROVED BY

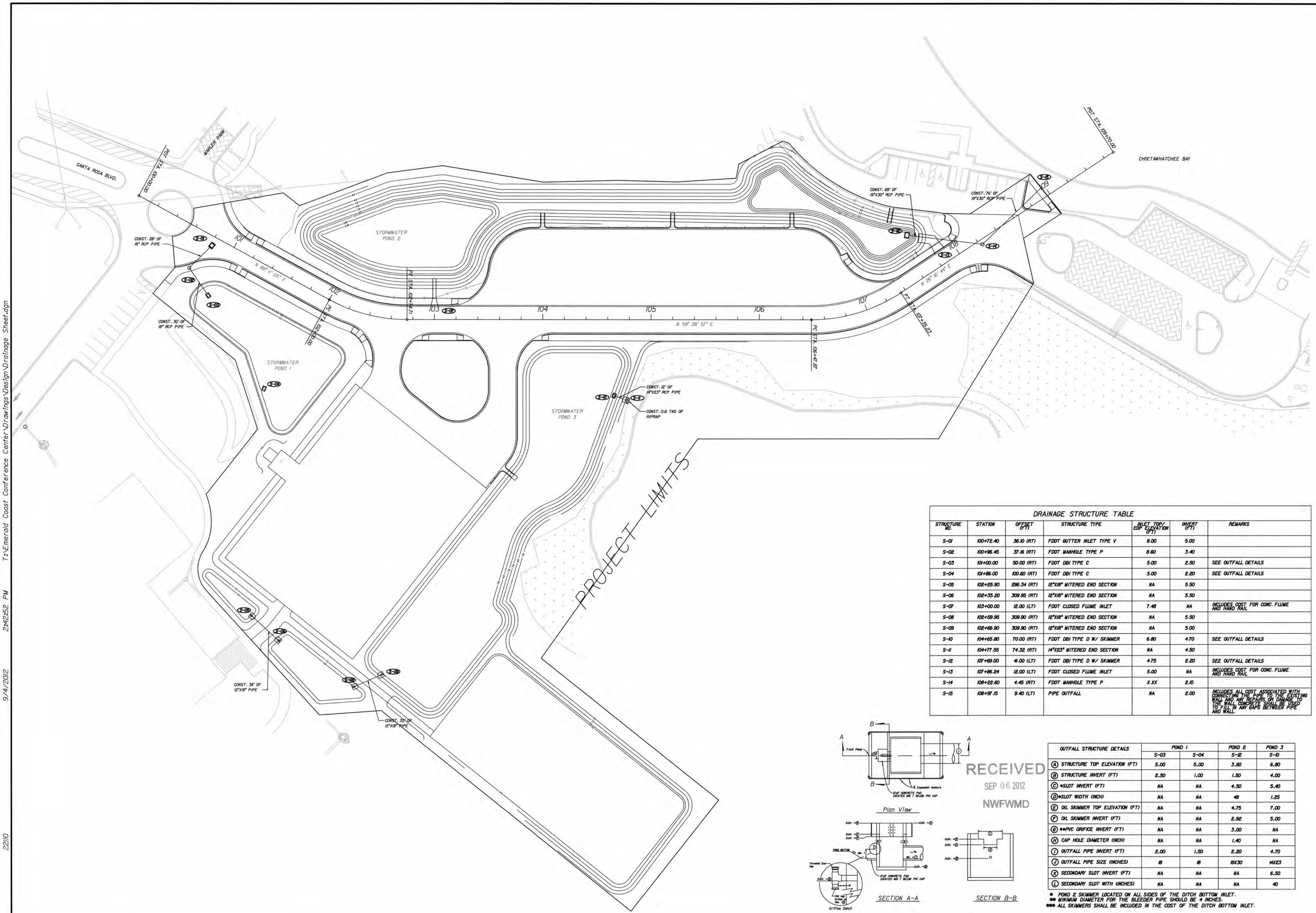

DRAINAGE STRUCTURE TABLE						
STRUCTURE NO.	STATION	OFFSET (FT)	STRUCTURE TYPE	INLET TOP/ EDP ELEVATION (FT)	INVERT (FT)	REMARKS
S-01	100+72.40	36.10 (RT)	FDOT GUTTER INLET TYPE V	8.00	5.00	
S-02	100+96.45	37.16 (RT)	FDOT MANHOLE TYPE P	8.60	3.40	
S-03	101+00.00	50.00 (RT)	FDOT DBI TYPE C	5.00	2.50	SEE OUTFALL DETAILS
S-04	101+86.00	100.60 (RT)	FDOT DBI TYPE C	5.00	2.20	SEE OUTFALL DETAILS
S-05	102+25.90	296.34 (RT)	12"X18" MITERED END SECTION	NA	5.50	
S-06	102+35.20	309.95 (RT)	12"X18" MITERED END SECTION	NA	5.50	
S-07	103+00.00	12.00 (LT)	FDOT CLOSED FLUME INLET	7.48	NA	INCLUDES COST FOR CONC. FLUME AND HAND RAIL
S-08	102+59.95	309.90 (RT)	12"X18" MITERED END SECTION	NA	5.50	
S-09	102+66.90	309.90 (RT)	12"X18" MITERED END SECTION	NA	5.00	
S-10	104+65.80	70.00 (RT)	FDOT DBI TYPE D W/ SKIMMER	6.80	4.70	SEE OUTFALL DETAILS
S-11	104+77.55	74.32 (RT)	14"X23" MITERED END SECTION	NA	4.50	
S-12	107+69.00	41.00 (LT)	FDOT DBI TYPE D W/ SKIMMER	4.75	2.20	SEE OUTFALL DETAILS
S-13	107+86.24	12.00 (LT)	FDOT CLOSED FLUME INLET	5.00	NA	INCLUDES COST FOR CONC. FLUME AND HAND RAIL
S-14	108+22.60	4.45 (RT)	FDOT MANHOLE TYPE P	X.XX	2.10	
S-15	108+97.15	9.40 (LT)	PIPE OUTFALL	NA	2.00	INCLUDES ALL COST ASSOCIATED WITH CONNECTING THE PIPE TO THE EXISTING WALL AND ANY REPAIRS OR DAMAGE TO THE WALL CONCRETE SHALL BE USED TO FILL IN ANY GAPS BETWEEN PIPE AND WALL.

RECEIVED
SEP 06 2012
NWFWMD

OUTFALL STRUCTURE DETAILS	POND 1		POND 2	POND 3
	S-03	S-04	S-12	S-10
(A) STRUCTURE TOP ELEVATION (FT)	5.00	5.00	3.60	6.80
(B) STRUCTURE INVERT (FT)	2.50	1.00	1.50	4.00
(C) *SLOT INVERT (FT)	NA	NA	4.50	5.40
(D) *SLOT WIDTH (INCH)	NA	NA	48	1.25
(E) OIL SKIMMER TOP ELEVATION (FT)	NA	NA	4.75	7.00
(F) OIL SKIMMER INVERT (FT)	NA	NA	2.92	5.00
(G) **PVC ORIFICE INVERT (FT)	NA	NA	3.00	NA
(H) CAP HOLE DIAMETER (INCH)	NA	NA	1.40	NA
(I) OUTFALL PIPE INVERT (FT)	2.00	1.50	2.20	4.70
(J) OUTFALL PIPE SIZE (INCHES)	18	18	8X30	14X23
(K) SECONDARY SLOT INVERT (FT)	NA	NA	NA	6.50
(L) SECONDARY SLOT WITH (INCHES)	NA	NA	NA	40

* POND 2 SKIMMER LOCATED ON ALL SIDES OF THE DITCH BOTTOM INLET.
** MINIMUM DIAMETER FOR THE BLEEDER PIPE SHOULD BE 4 INCHES.
*** ALL SKIMMERS SHALL BE INCLUDED IN THE COST OF THE DITCH BOTTOM INLET.

NUMBER	REVISIONS	DATE	APPROVED BY

MARLER PARK BOAT RAMP PARKING AND OUTDOOR EXHIBIT AREA

DRAINAGE PLAN

ATKINS
2114 Airport Blvd., Suite 1450, Pensacola, Florida 32504
Phone No. 850.478.9844

SCALE:	1 IN = 40 FT.
DRAWN BY:	K.M.M.
DESIGNED BY:	K.M.M.
CHECKED BY:	K.A.W.
APPROVED BY:	J.C.H.
PROJECT NUMBER	100024290
DRAWING NUMBER	C-111

T:\Emerald Coast Conference Center\Drawings\Design\Drainage Sheet.dgn 9/4/2012 2:42:52 PM 22110

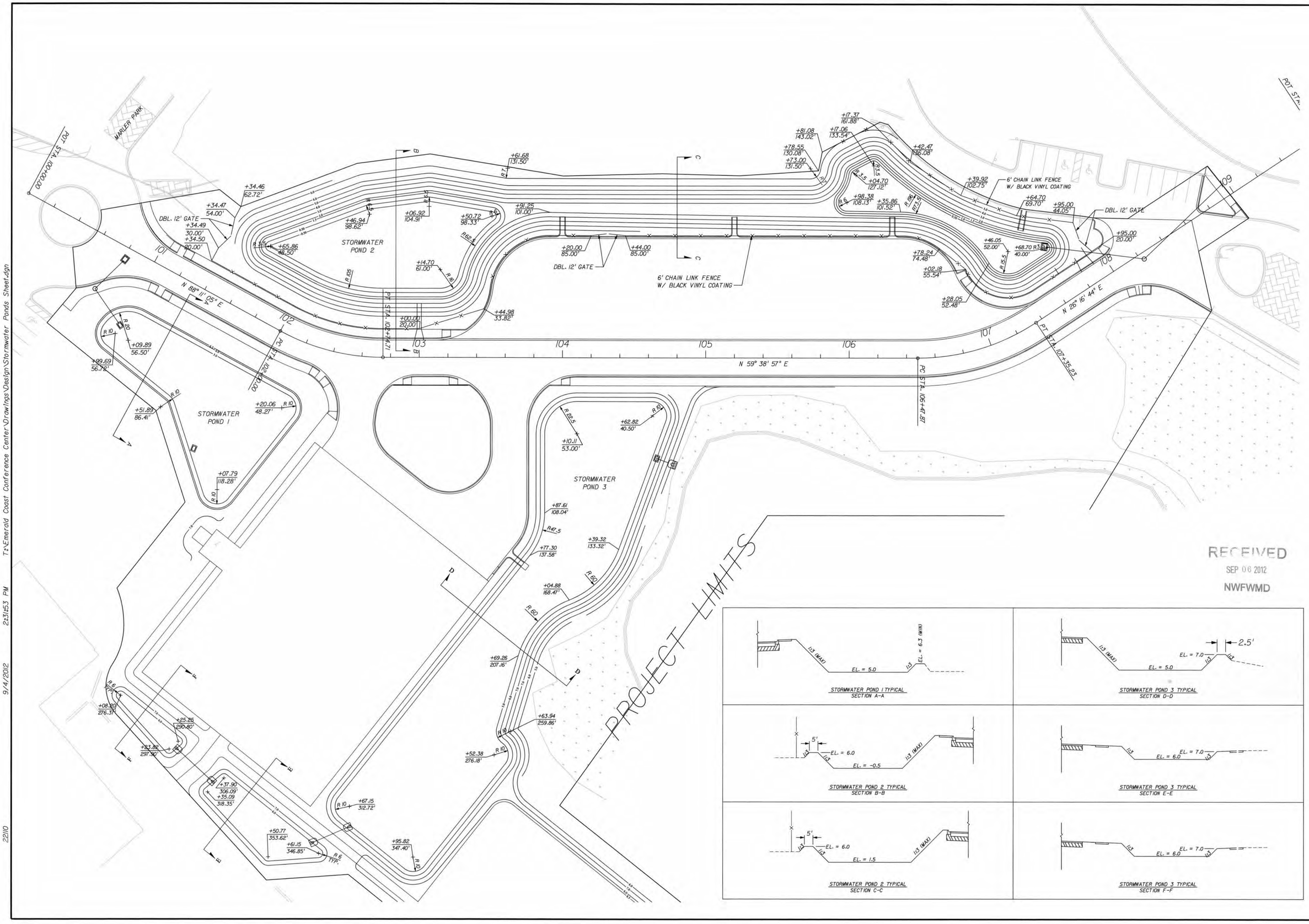

NUMBER	REVISIONS	DATE	APPROVED BY

MARLER PARK BOAT RAMP PARKING AND OUTDOOR EXHIBIT AREA

STORMWATER POND PLAN

ATKINS
2114 Airport Blvd., Suite 1450 Pensacola, Florida 32504
Phone No. 850.478.9844

ENGINEER REGISTERED
Kevin M. Morgan, P.E.
FL P.E. NO. 71350

SCALE:	1 IN = 30 FT.
DRAWN BY:	K.M.M.
DESIGNED BY:	K.M.M.
CHECKED BY:	K.A.W.
APPROVED BY:	J.C.H.
PROJECT NUMBER	100024290
DRAWING NUMBER	C-112

T:\Emerald Coast Conference Center\Drawings\Design\Stormwater Ponds Sheet.dgn 9/4/2012 2:31:53 PM 22110

SEDIMENTATION AND EROSION CONTROL
NOTES FOR DEMOLITION

1. REFER TO GENERAL CONSTRUCTION NOTES.
2. DEMOLITION INCLUDES COMPLETE WRECKING OF STRUCTURES AND THE REMOVAL AND DISPOSAL OF PAVEMENT, STRUCTURES, PIPING, MECHANICAL AND ELECTRICAL EQUIPMENT, CONCRETE, STEEL, AND ALL OTHER MISCELLANEOUS MATERIALS AND DEBRIS AS REQUIRED TO PREPARE THE SITE FOR NEW CONSTRUCTION.
3. ALL SEDIMENTATION / EROSION CONTROLS MUST BE CONSTRUCTED / IN PLACE PRIOR TO DEMOLITION.
4. THE USE OF EXPLOSIVES WILL NOT BE PERMITTED.
5. THE OWNER HAS FIRST RIGHT OF REFUSAL FOR ALL ITEMS OF SALVAGEABLE VALUE. ALL MATERIALS AND ITEMS NOT SALVAGED AND DELIVERED TO THE OWNER SHALL BE REMOVED OFF SITE FOR DISPOSAL IN FULL ACCORDANCE WITH ALL FEDERAL, STATE, COUNTY, AND CITY LAWS, CODES, REGULATIONS, AND ORDINANCES.
6. CONTRACTOR SHALL USE WATER SPRINKLING, TEMPORARY ENCLOSURES, AND OTHER SUITABLE METHODS TO LIMIT THE AMOUNT OF DUST AND DIRT RISING AND SCATTERING IN THE AIR TO THE LOWEST PRACTICAL LEVEL.
7. CONTRACTOR SHALL CLEAN ADJACENT STRUCTURES AND IMPROVEMENTS OF DUST, DIRT, AND DEBRIS CAUSED BY DEMOLITION OPERATIONS.
8. CONTRACTOR SHALL TAKE MEASURES AS MAY BE NECESSARY TO ENSURE THAT DUST, DIRT, OR DEBRIS IS NOT DEPOSITED ON STREET(S) BY HIS DEMOLITION OPERATIONS OR BY TRUCKING OPERATIONS. CONTRACTOR SHALL IMMEDIATELY CLEAN ANY SUCH DUST, DIRT, OR DEBRIS FROM THE ROADWAY(S).
9. CONTRACTOR SHALL BE RESPONSIBLE FOR LOCATING ALL EXISTING UTILITY SERVICE LINES AND CAPPING THE LINES AS NEAR AS POSSIBLE TO THE UTILITY MAIN(S) UNLESS OTHERWISE DIRECTED BY THE RESPECTIVE UTILITY PROVIDER. CONTRACTOR SHALL BE RESPONSIBLE FOR LOCATING, REROUTING, UNHOOKING, CAPPING OR BULK HEADING, AND REMOVING AND ABANDONING ALL UTILITIES AS NECESSARY TO COMPLETE THE WORK. CONTRACTOR SHALL COORDINATE ALL UTILITY DEMOLITION OPERATIONS WITH THE APPLICABLE UTILITY OWNER AND LEAVE ALL ABANDONED UTILITY CONNECTIONS AS SPECIFIED BY THE APPLICABLE UTILITY OWNER.
10. SOME UNDERGROUND UTILITIES SHOWN MAY BE FROM PREVIOUS DESIGN PLANS OR BASE UTILITY MAPS. PBS&J AND THE OWNER ASSUME NO RESPONSIBILITY FOR THE ACCURACY OF THIS INFORMATION.

SEDIMENTATION AND EROSION CONTROL
NOTES FOR CONSTRUCTION DURATION

1. CONTRACTOR SHALL CONDUCT SITE OPERATIONS IN A MANNER THAT DOES NOT CAUSE OR ALLOW OFFSITE TRANSPORT OF SEDIMENT.
2. CONTRACTOR SHALL PROVIDE SEDIMENT CONTROL MEASURES AS APPROPRIATE DURING CONSTRUCTION INCLUDING BUT NOT LIMITED TO STRAW BALE DROP INLET SEDIMENT FILTERS AND/OR PRE-MANUFACTURED INLET INSERTS (ULTRA-TECH ULTRA-GRATEGUARD GRATE COVER, ULTRA-TECH ULTRA-DRAINGUARD CATCH BASIN INSERT, OR EQUIVALENT) AT ALL INSTALLED STORM INLET BOXES WHERE THE TOP OF BOX IS NOT AT LEAST 10" ABOVE THE NEAREST ADJACENT UNFINISHED GRADE.
3. WHERE STRAW BALE BARRIERS ARE USED, CONTRACTOR SHALL TIGHTLY ABUT AND CHINK BETWEEN BALES WITH LOOSE STRAW AND SHALL EMBED BALES 4" INTO THE SOIL TO ENSURE THAT STORM RUNOFF DOES NOT BYPASS THE STRAW BALE BARRIER.
4. WHERE PRE-MANUFACTURED PRODUCTS ARE USED, CONTRACTOR SHALL REMOVE AND REPLACE THE COVERS/INSERTS WHEN THEY BECOME CLOGGED.
5. CONTRACTOR SHALL INSPECT THE SEDIMENT CONTROL MEASURES AT LEAST ONCE A WEEK AND AFTER EVERY RAINFALL EVENT OF ¼" OR MORE.
6. CONTRACTOR SHALL IMMEDIATELY REPAIR OR REPLACE ANY SEDIMENT CONTROL MEASURE THAT IS RENDERED DAMAGED OR INEFFECTIVE BY NORMAL USE OR EXTREME RAINFALL EVENTS.
7. CONTRACTOR SHALL INSTALL PRE-MANUFACTURED INLET INSERTS (ULTRA-TECH ULTRA-GRATEGUARD GRATE COVER, ULTRA-TECH ULTRA-DRAINGUARD CATCH BASIN INSERT, OR EQUIVALENT) AT ALL INSTALLED STORM INLET BOXES IMMEDIATELY FOLLOWING PAVING FOR ANY INLETS NOT ALREADY EQUIPPED WITH SAME.
8. IF WIND OR WAVE EROSION BECOMES SIGNIFICANT DURING CONSTRUCTION, THE CONTRACTOR SHALL STABILIZE THE AFFECTED AREA USING ACCEPTABLE COUNTY METHODS.
9. CONTRACTOR SHALL SOD ALL DISTURBED AREAS AS SOON AS PRACTICAL FOLLOWING GRADING OPERATIONS.
10. CONTRACTOR SHALL OBTAIN ALL REQUIRED PERMITS FOR DEWATERING IF DEWATERING IS PERFORMED.
11. CONTRACTOR SHALL CONTAIN DEWATERING DISCHARGE AND INFILTRATE BACK INTO AN ONSITE INFILTRATION SYSTEM WHERE POSSIBLE.

CONSTRUCTION SEQUENCE NOTES

1. THE COUNTY OR DESIGNEE BY THE COUNTY WILL BE RESPONSIBLE FOR MONITORING CONSTRUCTION.
2. CONTRACTOR SHALL PROVIDE CONSTRUCTION NOTIFICATION PRIOR TO INITIATING CONSTRUCTION IN ACCORDANCE WITH ALL PERMIT CONDITIONS AND BASE STANDARDS.
3. CONTRACTOR SHALL PLACE ALL SEDIMENT CONTROL PRIOR TO DEMOLITION, AS SHOWN ON DEMOLITION AND EROSION CONTROL SHEET.
4. CONTRACTOR SHALL MAINTAIN SEDIMENT CONTROLS DURING ALL PHASES OF DEMOLITION AND CONSTRUCTION.
5. ALL STORMWATER INLETS TO BE PROTECTED PER DETAIL THIS SHEET.
6. CONSTRUCT STORMWATER STRUCTURES AND PIPE RUNS.
7. PLACE INLET PROTECTION DEVICES.
8. CONTRACTOR SHALL MAINTAIN/ADJUST ALL SEDIMENT CONTROLS THROUGHOUT CONSTRUCTION.
9. REMOVE SEDIMENT CONTROL ONLY AFTER SITE IS FULLY STABILIZED.

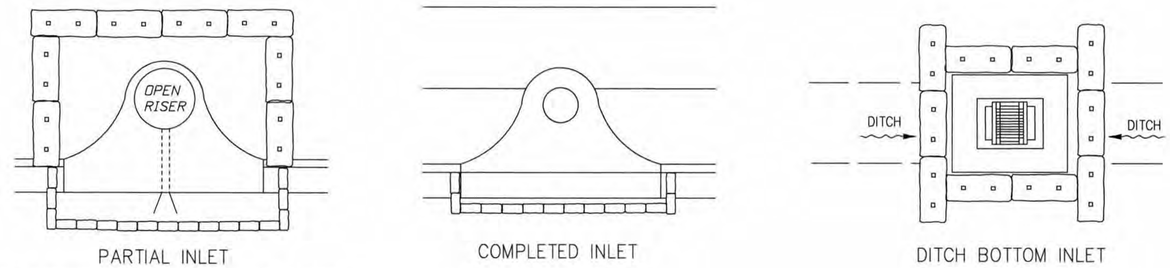

PARTIAL INLET — COMPLETED INLET — DITCH BOTTOM INLET

NOTES FOR SYNTHETIC BALES OR BALE TYPE BARRIERS

1. TYPE I AND II SYNTHETIC BARRIER SHOULD BE SPACED IN ACCORDANCE WITH CHART 1, SHEET 1.
2. BALES SHALL BE TRENCHED 3" TO 4" AND ANCHORED WITH 2–1" x 2" (OR 1" DIA.) x 4' WOOD STAKES. STAKES OR OTHER MATERIAL OR SHAPE PROVIDING EQUIVALENT STRENGTH MAYBE USED IF APPROVED BY THE ENGINEER. STAKES OTHER THAN WOOD SHALL BE REMOVED UPON COMPLETION OF THE PROJECT.
3. RAILS AND POST SHALL BE 2" x 4" WOOD. OTHER MATERIALS PROVIDING EQUIVALENT STRENGTH MAY BE USED IF APPROVED BY THE ENGINEER.
4. ADJACENT BALES SHALL BE BUTTED FIRMLY TOGETHER.
5. WHERE USED IN CONJUNCTION WITH SILT FENCE, BALES SHALL BE PLACED ON THE UPSTREAM SIDE OF THE FENCE.
6. ALL EROSION CONTROL MEASURES TO BE PAID FOR UNDER LUMP SUM EROSION CONTROL BID ITEM.

INLET PROTECTION DEVICE (1 / C103)
SCALE: NTS

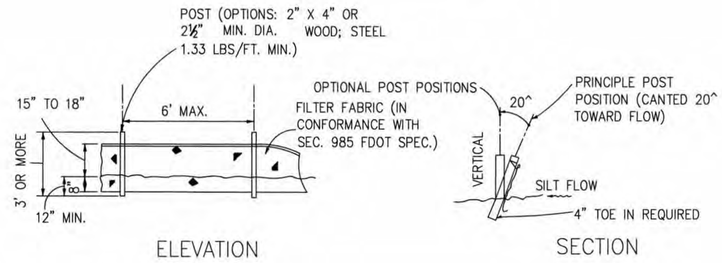

ELEVATION — SECTION

NOTES:
1. SET THE POSTS AND EXCAVATE A 4"x4" TRENCH UPSLOPE ALONG THE LINE OF POSTS.
2. STAPLE WIRE FENCING TO THE POSTS.
3. ATTACH THE FILTER FABRIC TO THE WIRE FENCE AND EXTEND IT INTO THE TRENCH.
4. BACKFILL AND COMPACT THE EXCAVATED SOIL.
5. SILT FENCE TO BE PAID FOR UNDER THE CONTRACT UNIT PRICE FOR STAKED SILT FENCE (LF).
6. REMOVE ALL BARRIERS UPON COMPLETION OF PROJECT.

SILT FENCE DETAIL (2 / C103)
SCALE: NTS

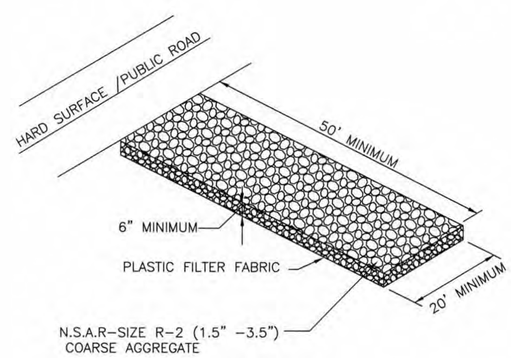

STABILIZED CONSTRUCTION ENTRANCE (3 / C103)
SCALE: NTS

MINIMUM REQUIRED STORM AS-BUILTS

THE FOLLOWING INFORMATION, AT A MINIMUM, SHALL BE VERIFIED ON THE AS-BUILT DRAWINGS TO BE PROVIDED BY THE CONTRACTOR TO THE ENGINEER:

DISCHARGE/INLET STRUCTURES – DIMENSIONS AND ELEVATIONS OF ALL, INCLUDING PIPE INVERTS, GRATE ELEVATIONS, RISER ELEVATIONS, GRAVEL BOTTOM, TOP ELEVATIONS, ORIFICES, GATES, PUMPS, AND PIPES.

STORAGE AREAS FOR TREATMENT AND ATTENUATION – DIMENSION ELEVATIONS, CONTOURS OR CROSS-SECTIONS, SUFFICIENT TO DETERMINE STORAGE CAPACITY.

SYSTEM GRADING – DIMENSIONS, ELEVATIONS, CONTOURS FINAL GRADES OR CROSS-SECTIONS TO DETERMINE CONTRIBUTING DRAINAGE AREAS, FLOW DIRECTIONS AND CONVEYANCE OF RUNOFF TO THE SYSTEM DISCHARGE POINTS(S).

CONVEYANCE-DIMENSIONS, ELEVATIONS, CONTOURS, FINAL GRADES OR CROSS-SECTIONS TO DETERMINE CONTRIBUTING DRAINAGE AREAS, DISCHARGE POINT(S).

WATER LEVELS – EXISTING WATER ELEVATION(S) AND THE DATE DETERMINED.

BENCHMARK(S) – LOCATION AND DESCRIPTION (MINIMUM OF ONE PER MAJOR WATER CONTROL STRUCTURE).

RECEIVED
SEP 06 2012
NWFWMD

NUMBER	REVISIONS	DATE	APPROVED BY

MARLER PARK BOAT RAMP PARKING AND OUTDOOR EXHIBIT AREA
STORMWATER POLLUTION PREVENTION PLAN

ATKINS
2114 Airport Blvd., Suite 1450 Pensacola, Florida 32504
Phone No. 850.478.9844

SCALE:	
DRAWN BY:	K.M.M.
DESIGNED BY:	K.M.M.
CHECKED BY:	K.A.W.
APPROVED BY:	J.C.H.
PROJECT NUMBER	100024290
DRAWING NUMBER	C-113

T:\Emerald Coast Conference Center\V00004695\roadway\SWPPP Sheet.dgn 7:37:00 AM 7/23/2012 22110

STORMWATER POLLUTION PREVENTION PLAN CONTRACTOR'S REQUIREMENTS

SITE DESCRIPTION

MARLER PARK BOAT RAMP PARKING
AND OUTDOOT EXHIBIT AREA PROJECT
1306 MIRACLE STRIP PARKWAY
FORT WALTON, FLORIDA 32548

SEC 24, T 2S, R 23W

DESCRIPTION:
CONSTRUCTION OF ADDITONAL BOAT RAMP PARKING AND OUTDOOT EXHIBIT WITH ASSOCIATED STORMWATER MANAGEMENT FACILITIES.

SOIL DISTURBING ACTIVITIES WILL INCLUDE:
CLEARING AND GRUBBING; EARTHWORK, PAVEMENT, GRADING, AND DRAINAGE STRUCTURES;

STORM SEWER, UTILITIES, AND SODDING.

RUNOFF CURVE NUMBERS:
1. PRE-CONSTRUCTION: 39-67
2. DURING CONSTRUCTION : 39-84
3. POST-CONSTRUCTION : 77-84

SOILS:
SEE SOIL BORING REPORT AND SOILS SURVEY FOR SOILS DATA

SITE AREA: 1. TOTAL AREA TO BE DISTURBED = 4.5 ACRES (APPROX)

NAME OF RECEIVING WATERS: OFF-SITE UN-NAMED WETLANDS AND CHOCTAWHATCHEE BAY

ESTIMATED START OF CONSTRUCTION: _____
ESTIMATED END OF CONSTRUCTION: _____

CONTROLS

THIS PLAN UTILIZES BEST MANAGEMENT PRACTICES TO CONTROL EROSION AND TURBIDITY CAUSED BY STORM WATER RUN OFF. AN EROSION AND TURBIDITY PLAN HAS BEEN PREPARED TO INSTRUCT THE CONTRACTOR ON PLACEMENT OF THESE CONTROLS. REFER TO SHEET C-103 & C-910. IT IS THE CONTRACTORS RESPONSIBILITY TO INSTALL AND MAINTAIN THE CONTROLS PER PLAN AS WELL AS ENSURING THE PLAN IS PROVIDING THE PROPER PROTECTION AS REQUIRED BY FEDERAL, STATE AND LOCAL LAWS. REFER TO "CONTRACTORS RESPONSIBILITY" FOR A VERBAL DESCRIPTION OF THE CONTROLS THAT MAY BE IMPLEMENTED.

STORMWATER MANAGEMENT
STORMWATER DRAINAGE WILL BE PROVIDED BY CONRETE FLUMES AND CLOSED INLETS DISCHARGING TO THREE STORWATER PONDS. AREAS WHICH ARE NOT TO BE CONSTRUCTED ON, BUT WILL BE REGRADED SHALL BE STABILIZED IMMEDIATELY AFTER GRADING IS COMPLETE, WHEN CONSTRUCTION IS COMPLETE, A TOTAL OF APPROX. 4.5 ACRES WILL HAVE BEEN DISTURBED. THE SITE DISCHARGES TO AN OFF-SITE UN-NAMED WETLAND AND CHOCTAWHATCEE BAY. THE STORMWATER FACILITY IS DESIGNED TO TREAT THE FIRST 1 INCH OF RUN-OFF.

CERTIFICATION OF COMPLIANCE WITH FEDERAL, STATE AND LOCAL REGULATIONS

IN ACCORDANCE WITH FEDERAL, STATE AND LOCAL LAWS RELATED TO STORM WATER MANAGEMENT AND EROSION AND TURBIDITY CONTROLS, THE FOLLOWING PERMITS HAVE BEEN OBTAINED.

E.R.P. PERMIT #_____
FDEP DREDGE AND FILL #_____
ACOE PERMIT #_____

POLLUTION PREVENTION PLAN CERTIFICATION

I CERTIFY UNDER PENALTY OF LAW THAT THIS DOCUMENT AND ALL ATTACHMENTS WERE PREPARED UNDER MY DIRECTION OR SUPERVISION IN ACCORDANCE WITH A SYSTEM DESIGNED TO ASSURE THAT QUALIFIED PERSONNEL PROPERLY GATHERED AND EVALUATED THE INFORMATION SUBMITTED. BASED ON MY INQUIRY OF THE PERSON OR PERSONS WHO MANAGE THE SYSTEM, OR THOSE PERSONS DIRECTLY RESPONSIBLE FOR GATHERING THE INFORMATION, THE INFORMATION SUBMITTED IS, TO THE BEST OF MY KNOWLEDGE AND BELIEF, TRUE, ACCURATE, AND COMPLETE. I AM AWARE THAT THERE ARE SIGNIFICANT PENALTIES FOR SUBMITTING FALSE INFORMATION, INCLUDING THE POSSIBILITY OF FINE AND IMPRISONMENT FOR KNOWING VIOLATIONS.

SIGNED:_____
ENGINEER OF RECORD; KEVIN M. MORGAN, PE

DATED:_____

GENERAL

THE CONTRACTOR SHALL AT A MINIMUM IMPLEMENT THE CONTRACTOR'S REQUIREMENTS OUTLINED BELOW AND THOSE MEASURES SHOWN ON THE EROSION CONTROL PLAN. IN ADDITION THE CONTRACTOR SHALL UNDERTAKE ADDITIONAL MEASURES REQUIRED TO BE IN COMPLIANCE WITH APPLICABLE PERMIT CONDITIONS AND STATE WATER QUALITY STANDARDS. DEPENDING ON THE NATURE OF MATERIALS AND METHODS OF CONSTRUCTION THE CONTRACTOR MAY BE REQUIRED TO ADD FLOCCULENTS TO THE RETENTION SYSTEM PRIOR TO PLACING THE SYSTEM INTO OPERATION.

SEQUENCE OF MAJOR ACTIVITIES:

SEE "CONSTRUCTION SEQUENCE NOTES"

TIMING OF CONTROLS/MEASURES

SEE "SEDIMENTATION AND EROSION CONTROL NOTES FOR DEMOLITION" AND SEDIMENTATION AND EROSION CONTROL NOTES FOR CONSTRUCTION DURATION"

CONTRACTORS RESPONSIBILITY

IT IS THE CONTRACTORS RESPONSIBILITY TO IMPLEMENT THE EROSION AND TURBIDITY CONTROLS AS SHOWN ON THE EROSION AND TURBIDITY CONTROL PLAN. IT IS ALSO THE CONTRACTORS RESPONSIBILITY TO ENSURE THESE CONTROLS ARE PROPERLY INSTALLED , MAINTAINED AND FUNCTIONING PROPERLY TO PREVENT TURBID OR POLLUTED WATER FROM LEAVING THE PROJECT SITE. THE CONTRACTOR WILL ADJUST THE EROSION AND TURBIDITY CONTROLS SHOWN ON THE EROSION AND TURBIDITY CONTROL PLAN AND ADD ADDITIONAL CONTROL MEASURES, AS REQUIRED,TO ENSURE THE SITE MEETS ALL FEDERAL, STATE AND LOCAL EROSION AND TURBIDITY CONTROL REQUIREMENTS. THE FOLLOWING BEST MANAGEMENT PRACTICES WILL BE IMPLEMENTED BY THE CONTRACTOR AS REQUIRED BY THE EROSION AND TURBIDITY CONTROL PLAN AND AS REQUIRED TO MEET THE EROSION AND TURBIDITY REQUIREMENTS IMPOSED ON THE PROJECT SITE BY THE REGULATORY AGENCIES. SEE SHEET C-910 FOR SEDIMENTATION AND EROSION CONTROL DETAILS.

EROSION AND SEDIMENT CONTROLS
STABILIZATION PRACTICES
1. HAY BALE BARRIER: HAY BALE BARRIERS CAN BE USED BELOW DISTURBED AREAS SUBJECT TO SHEET AND RILL EROSION WITH THE FOLLOWING LIMITATIONS:
A. WHERE THE MAXIMUM SLOPE BEHIND THE BARRIER IS 33 PERCENT.
B. IN MINOR SWALES OR DITCH LINES WHERE THE MAXIMUM CONTRIBUTING DRAINAGE AREA IS NO GREATER THAN 2 ACRES.
C. WHERE EFFECTIVENESS IS REQUIRED FOR LESS THAN 3 MONTHS.
D. EVERY EFFORT SHOULD BE MADE TO LIMIT THE USE OF STRAW BALE BARRIERS CONSTRUCTED IN LIVE STREAMS OR IN SWALES WHERE THERE IS THE POSSIBILITY OF A WASHOUT. IF NECESSARY, MEASURES SHALL BE TAKEN TO PROPERLY ANCHOR BALES TO ENSURE AGAINST WASHOUT.

2. FILTER FABRIC BARRIER: FILTER FABRIC BARRIERS CAN BE USED BELOW DISTURBED AREAS SUBJECT TO SHEET AND RILL EROSION WITH THE FOLLOWING LIMITATIONS:
A. WHERE THE MAXIMUM SLOPE BEHIND THE BARRIER IS 33 PERCENT.
B. IN MINOR SWALES OR DITCH LINES WHERE THE MAXIMUM CONTRIBUTING DRAINAGE AREA IS NO GREATER THAN 2 ACRES.

3. BRUSH BARRIER WITH FILTER FABRIC: BRUSH BARRIER MAY BE USED BELOW DISTURBED AREAS SUBJECT TO SHEET AND RILL EROSION WHERE ENOUGH RESIDUE MATERIAL IS AVAILABLE ON SITE.

4. LEVEL SPREADER: A LEVEL SPREADER MAY BE USED WHERE SEDIMENT-FREE STORM RUNOFF IS INTERCEPTED AND DIVERTED AWAY FROM THE GRADED AREAS ONTO UNDISTURBED STABILIZED AREAS. THIS PRACTICE APPLIES ONLY IN THOSE SITUATIONS WHERE THE SPREADER CAN BE CONSTRUCTED ON UNDISTURBED SOIL AND THE AREA BELOW THE LEVEL LIP IS STABILIZED. THE WATER SHOULD NOT BE ALLOWED TO RECONCENTRATE AFTER RELEASE.

5. STOCKPILING MATERIAL: NO EXCAVATED MATERIAL SHALL BE STOCKPILED ONSITE OR AT THE BOAT RAMP OR CONFERENCE CENTER.

6. EXPOSED AREA LIMITATION: THE SURFACE AREA OF OPEN, RAW ERODIBLE SOIL EXPOSED BY CLEARING AND GRUBBING OPERATIONS OR EXCAVATION AND FILLING OPERATIONS SHALL NOT EXCEED 10 ACRES. THIS REQUIREMENT MAY BE WAIVED FOR LARGE PROJECTS WITH AN EROSION CONTROL PLAN WHICH DEMONSTRATES THAT OPENING OF ADDITIONAL AREAS WILL NOT SIGNIFICANTLY AFFECT OFF-SITE DEPOSIT OF SEDIMENTS.

7. INLET PROTECTION: INLETS AND CATCH BASINS WHICH DISCHARGE DIRECTLY OFF-SITE SHALL BE PROTECTED FROM SEDIMENT-LADEN STORM RUNOFF UNTIL THE COMPLETION OF ALL CONSTRUCTION OPERATIONS THAT MAY CONTRIBUTE SEDIMENT TO THE INLET.

8. TEMPORARY SEEDING: AREAS OPENED BY CONSTRUCTION OPERATIONS AND THAT ARE NOT ANTICIPATED TO BE RE-EXCAVATED OR DRESSED AND RECEIVE FINAL GRASSING TREATMENT WITHIN 30 DAYS SHALL BE SEEDED WITH A QUICK GROWING GRASS SPECIES WHICH WILL PROVIDE AN EARLY COVER DURING THE SEASON IN WHICH IT IS PLANTED AND WILL NOT LATER COMPETE WITH THE PERMANENT GRASSING.

9. TEMPORARY SEEDING AND MULCHING: SLOPES STEEPER THAN 6:1 THAT FALL WITHIN THE CATEGORY ESTABLISHED IN PARAGRAPH 8 ABOVE SHALL ADDITIONALLY RECEIVE MULCHING OF APPROXIMATELY 2 INCHES LOOSE MEASURE OF MULCH MATERIAL CUT INTO THE SOIL OF THE SEEDED AREA ADEQUATE TO PREVENT MOVEMENT OF SEED AND MULCH.

10. TEMPORARY GRASSING: THE SEEDED OR SEEDED AND MULCHED AREA(S) SHALL BE ROLLED AND WATERED OR HYDROMULCHED OR OTHER SUITABLE METHODS IF REQUIRED TO ASSURE OPTIMUM GROWING CONDITIONS FOR THE ESTABLISHMENT OF A GOOD GRASS COVER. TEMPORARY GRASSING SHALL BE THE SAME MIX & AMOUNT REQUIRED FOR PERMANENT GRASSING IN THE CONTRACT SPECIFICATIONS.

11. TEMPORARY REGRASSING : IF, AFTER 14 DAYS FROM SEEDING, THE TEMPORARY GRASSED AREAS HAVE NOT ATTAINED A MINIMUM OF 75 PERCENT GOOD GRASS COVER, THE AREA WILL BE REWORKED AND ADDITIONAL SEED APPLIED SUFFICIENT TO ESTABLISH THE DESIRED VEGETATIVE COVER.

12. MAINTENANCE: ALL FEATURES OF THE PROJECT DESIGNED AND CONSTRUCTED TO PREVENT EROSION AND SEDIMENT SHALL BE MAINTAINED DURING THE LIFE OF THE CONSTRUCTION SO AS TO FUNCTION AS THEY WERE ORIGINALLY DESIGNED AND CONSTRUCTED.

13. PERMANENT EROSION CONTROL: THE EROSION CONTROL FACILITIES OF THE PROJECT SHOULD BE DESIGNED TO MINIMIZE THE IMPACT ON THE OFFSITE FACILITIES.

14. PERMANENT SEEDING: ALL AREAS WHICH HAVE BEEN DISTURBED BY CONSTRUCTION WILL, AS A MINIMUM, BE SEEDED. THE SEEDING MIX MUST PROVIDE BOTH LONG-TERM VEGETATION AND RAPID GROWTH SEASONAL VEGETATION. SLOPES STEEPER THAN 4:1 SHALL BE SEEDED AND MULCHED OR SODDED.

STRUCTURAL PRACTICES
1. TEMPORARY DIVERSION DIKE: TEMPORARY DIVERSION DIKES MAY BE USED TO DIVERT RUNOFF THROUGH A SEDIMENT-TRAPPING FACILITY.

2. TEMPORARY SEDIMENT TRAP: A SEDIMENT TRAP SHALL BE INSTALLED IN A DRAINAGE WAY AT A STORM DRAIN INLET OR AT OTHER POINTS OF DISCHARGE FROM A DISTURBED AREA. THE FOLLOWING SEDIMENT TRAPS MAY BE CONSTRUCTED EITHER INDEPENDENTLY OR IN CONJUNCTION WITH A TEMPORARY DIVERSION DIKE:
A. BLOCK & GRAVEL SEDIMENT FILTER – THIS PROTECTION IS APPLICABLE WHERE HEAVY FLOWS AND/OR WHERE AN OVERFLOW CAPACITY IS NECESSARY TO PREVENT EXCESSIVE PONDING AROUND THE STRUCTURE.
B. GRAVEL SEDIMENT TRAP – THIS PROTECTION IS APPLICABLE WHERE HEAVY CONCENTRATED FLOWS ARE EXPECTED, BUT NOT WHERE PONDING AROUND THE STRUCTURE MIGHT CAUSE EXCESSIVE INCONVENIENCE OR DAMAGE TO ADJACENT STRUCTURES & UNPROTECTED AREAS.
C. DROP INLET SEDIMENT TRAP – THIS PROTECTION IS APPLICABLE WHERE THE INLET DRAINS A RELATIVELY FLAT AREA ($S < 5\%$) AND WHERE SHEET OR OVERLAND FLOWS ($Q < 0.5$ CFS) ARE TYPICAL. THIS METHOD SHALL NOT APPLY TO INLETS RECEIVING CONCENTRATED FLOWS SUCH AS IN STREET OR HIGHWAY MEDIANS.

3. OUTLET PROTECTION: APPLICABLE TO THE OUTLETS OF ALL PIPES AND PAVED CHANNEL SECTIONS WHERE THE FLOW COULD CAUSE EROSION & SEDIMENT PROBLEM TO THE RECEIVING WATER BODY. SILT FENCES & HAY BALES OR OTHER DEVICES ARE TO BE INSTALLED IMMEDIATELY DOWNSTREAM OF THE DISCHARGING STRUCTURE.

4. SEDIMENT BASIN: WILL BE CONSTRUCTED AT THE COMMON DRAINAGE LOCATIONS, THE PROPOSED STORMWATER PONDS WILL BE CONSTRUCTED FOR USE AS SEDIMENT BASINS. ANY TEMPORARY SEDIMENT BASINS CONSTRUCTED MUST BE BACKFILLED AND COMPACTED IN ACCORDANCE WITH THE SPECIFICATIONS FOR STRUCTURAL FILL. ALL SEDIMENT COLLECTED IN PERMANENT OR TEMPORARY SEDIMENT TRAPS MUST BE REMOVED UPON FINAL STABILIZATION.

OTHER CONTROLS

WASTE DISPOSAL

WASTE MATERIALS
ALL WASTE MATERIALS EXCEPT LAND CLEARING DEBRIS SHALL BE COLLECTED AND STORED IN A SECURELY LIDDED METAL DUMPSTER. THE DUMPSTER WILL MEET ALL LOCAL AND STATE SOLID WASTE MANAGEMENT REGULATIONS. THE DUMPSTER WILL BE EMPTIED AS NEEDED AND THE TRASH WILL BE HAULED TO A STATE APPROVED LANDFILL. ALL PERSONNEL WILL BE INSTRUCTED REGARDING THE CORRECT PROCEDURE FOR WASTE DISPOSAL. NOTICES STATING THESE PRACTICES WILL BE POSTED AT THE CONSTRUCTION SITE BY THE CONSTRUCTION SUPERINTENDENT, THE INDIVIDUAL WHO MANAGES THE DAY-TO-DAY SITE OPERATIONS, WILL BE RESPONSIBLE FOR SEEING THAT THESE PROCEDURES ARE FOLLOWED.

HAZARDOUS WASTE
ALL HAZARDOUS WASTE MATERIALS WILL BE DISPOSED OF IN THE MANNER SPECIFIED BY LOCAL OR STATE REGULATION OR BY THE MANUFACTURER. SITE PERSONNEL WILL BE INSTRUCTED IN THESE PRACTICES AND THE SITE SUPERINTENDENT, THE INDIVIDUAL WHO MANAGES DAY-TO-DAY SITE OPERATIONS,WILL BE RESPONSIBLE FOR SEEING THAT THESE PRACTICES ARE FOLLOWED.

SANITARY WASTE
ALL SANITARY WASTE WILL BE COLLECTED FROM THE PORTABLE UNITS AS NEEDED TO PREVENT POSSIBLE SPILLAGE. THE WASTE WILL BE COLLECTED AND DISPOSED OF IN ACCORDANCE WITH STATE AND LOCAL WASTE DISPOSAL REGULATIONS FOR SANITARY SEWER OR SEPTIC SYSTEMS.

OFFSITE VEHICLE TRACKING
A STABILIZED CONSTRUCTION ENTRANCE WILL BE PROVIDED IF REQUIRED BY OWNER TO HELP REDUCE VEHICLE TRACKING OF SEDIMENTS. THE PAVED STREET ADJACENT TO THE SITE ENTRANCE WILL BE SWEPT DAILY TO REMOVE ANY EXCESS MUD, DIRT OR ROCK TRACKED FROM THE SITE. DUMP TRUCKS HAULING MATERIAL FROM THE CONSTRUCTION SITE WILL BE COVERED WITH A TARPAULIN.

RECEIVED
SEP 06 2012
NWFWMD

INVENT. FOR POLLUTION PREVENTION PLAN

THE MATERIALS OR SUBSTANCES LISTED BELOW ARE EXPECTED TO BE PRESENT ONSITE DURING CONSTRUCTION:

☒ CONCRETE	☒ FERTILIZERS	☒ WOOD
☒ ASPHALT	☒ PETROLEUM BASED PRODUCTS	☒ MASONRY BLOCKS
☒ TAR	☒ CLEANING SOLVENTS	☒ ROOFING MATERIALS
☒ DETERGENTS	☒ PAINTS	☒ METAL STUDS
☒ ROAD BASE	☐ _____	☐ _____

SPILL PREVENTION

MATERIAL MANAGEMENT PRACTICES
THE FOLLOWING ARE THE MATERIAL MANAGEMENT PRACTICES THAT WILL BE USED TO REDUCE THE RISK OF SPILLS OR OTHER ACCIDENTAL EXPOSURE OF MATERIALS AND SUBSTANCES TO STORM WATER RUNOFF. THE FOLLOWING GOOD HOUSEKEEPING PRACTICES WILL BE FOLLOWED ONSITE DURING THE CONSTRUCTION PROJECT.
* AN EFFORT WILL BE MADE TO STORE ONLY ENOUGH PRODUCT REQUIRED TO DO THE JOB.
* ALL MATERIALS STORED ONSITE WILL BE STORED IN A NEAT, ORDERLY MANNER IN THEIR APPROPRIATE CONTAINERS AND, IF POSSIBLE, UNDER A ROOF OR OTHER ENCLOSURE.
* PRODUCTS WILL BE KEPT IN THEIR ORIGINAL CONTAINERS WITH THE ORIGINAL MANUFACTURER'S LABEL.
* SUBSTANCES WILL NOT BE MIXED WITH ONE ANOTHER UNLESS RECOMMENDED BY THE MANUFACTURER.
* WHENEVER POSSIBLE, ALL OF A PRODUCT WILL BE USED UP BEFORE DISPOSING OF THE CONTAINER.
* MANUFACTURER'S RECOMMENDATIONS FOR PROPER USE AND DISPOSAL WILL BE FOLLOWED.
* THE SITE SUPERINTENDENT WILL INSPECT DAILY TO ENSURE MATERIALS ONSITE RECEIVE PROPER USE AND DISPOSAL.

HAZARDOUS PRODUCTS
THESE PRACTICES ARE USED TO REDUCE THE RISKS ASSOCIATED WITH HAZARDOUS MATERIALS.
* PRODUCTS WILL BE KEPT IN ORIGINAL CONTAINERS UNLESS THEY ARE NOT RESEALABLE.
* ORIGINAL LABELS AND MATERIAL SAFETY DATA WILL BE RETAINED; THEY CONTAIN IMPORTANT PRODUCT INFORMATION.
* IF SURPLUS PRODUCT MUST BE DISPOSED OF, MANUFACTURER'S OR LOCAL AND STATE RECOMMENDED METHODS FOR PROPER DISPOSAL WILL BE FOLLOWED.

PRODUCT SPECIFIC PRACTICES
THE FOLLOWING PRODUCT SPECIFIC PRACTICES WILL BE FOLLOWED ONSITE:

PETROLEUM PRODUCTS
ALL ONSITE VEHICLES WILL BE MONITORED FOR LEAKS AND RECEIVE REGULAR PREVENTIVE MAINTENANCE TO REDUCE THE CHANCE OF LEAKAGE. PETROLEUM PRODUCTS WILL BE STORED IN TIGHTLY SEALED CONTAINERS WHICH ARE CLEARLY LABELED. ANY ASPHALT SUBSTANCES USED ONSITE WILL BE APPLIED ACCORDING TO THE MANUFACTURER'S RECOMMENDATIONS.

FERTILIZERS
FERTILIZERS USED WILL BE APPLIED ONLY IN THE MINIMUM AMOUNTS RECOMMENDED BY THE MANUFACTURER. ONCE APPLIED, FERTILIZER WILL BE WORKED INTO THE SOIL TO LIMIT EXPOSURE TO STORM WATER. STORAGE WILL BE IN A COVERED AREA. THE CONTENTS OF ANY PARTIALLY USED BAGS OF FERTILIZER WILL BE TRANSFERRED TO A SEALABLE PLASTIC BIN TO AVOID SPILLS.

PAINTS
ALL CONTAINERS WILL BE TIGHTLY SEALED AND STORED WHEN NOT REQUIRED FOR USE. EXCESS PAINT WILL NOT BE DISCHARGED TO THE STORM SEWER SYSTEM BUT WILL BE PROPERLY DISPOSED OF ACCORDING TO MANUFACTURERS' INSTRUCTIONS OR STATE AND LOCAL REGULATIONS.

CONCRETE TRUCKS
CONCRETE TRUCKS WILL NOT BE ALLOWED TO WASH OUT OR DISCHARGE SURPLUS CONCRETE OR DRUM WASH WATER ON THE SITE.

SPILL CONTROL PRACTICES
IN ADDITION TO THE GOOD HOUSEKEEPING AND MATERIAL MANAGEMENT PRACTICES DISCUSSED IN THE PREVIOUS SECTIONS OF THIS PLAN, THE FOLLOWING PRACTICES WILL BE FOLLOWED FOR SPILL PREVENTION AND CLEANUP:

MANUFACTURERS' RECOMMENDED METHODS FOR SPILL CLEANUP WILL BE CLEARLY POSTED ON SITE AND SITE PERSONNEL WILL BE MADE AWARE OF THE PROCEDURES AND THE LOCATION OF THE INFORMATION AND CLEANUP SUPPLIES.

MATERIALS AND EQUIPMENT NECESSARY FOR SPILL CLEANUP WILL BE KEPT IN THE MATERIAL STORAGE AREA ONSITE. EQUIPMENT AND MATERIALS WILL INCLUDE BUT NOT BE LIMITED TO BROOMS, DUST PANS, MOPS, RAGS, GLOVES, GOGGLES, LIQUID ABSORBENT (i.e. KITTY LITTER OR EQUAL), SAND, SAWDUST, AND PLASTIC AND METAL TRASH CONTAINERS SPECIFICALLY FOR THIS PURPOSE.

NUMBER	REVISIONS	DATE	APPROVED BY

MARLER PARK BOAT RAMP PARKING AND OUTDOOR EXHIBIT AREA
STORMWATER POLLUTION PREVENTION PLAN

ATKINS
2114 Airport Blvd., Suite 1450 Pensacola, Florida 32504
Phone No. 850.478.9844

ENGINEER OF RECORD
KEVIN M. MORGAN
STATE OF FLORIDA
No. 71350
PROFESSIONAL ENGINEER
Kevin M. Morgan, PE
FL Reg. No. 71350

SCALE:	
DRAWN BY:	K.M.M.
DESIGNED BY:	K.M.M.
CHECKED BY:	K.A.W.
APPROVED BY:	J.C.H.
PROJECT NUMBER	100024290
DRAWING NUMBER	C-114

T:\Emerald Coast Conference Center\00004695\roadway\SWPPP Sheet.dgn 7:37:43 AM 7/23/2012 22110

GENERAL NOTES:

1. ALL EXISTING SIGNS ARE TO REMAIN UNLESS NOTED ON PLANS OR DIRECTED BY THE COUNTY ENGINEER.
2. ALL SIGNS, SIGN POST, AND OTHER ITEMS ASSOCIATED WITH INSTALLATION OF SIGNS SHALL MEET COUNTY OR FDOT SPECIFICATIONS.

RECEIVED
SEP 06 2012
NWFWMD

NUMBER	REVISIONS	DATE	APPROVED BY

MARLER PARK BOAT RAMP PARKING AND OUTDOOR EXHIBIT AREA
SIGNING AND PAVEMENT MARKINGS PLAN

ATKINS
2114 Airport Blvd., Suite 1450 Pensacola, Florida 32504
Phone No. 850.478.9844

Kevin M. Morgan, P.E. — License No. 71350 — State of Florida — Professional Engineer

SCALE:	1 IN = 40 FT.
DRAWN BY:	K.M.M.
DESIGNED BY:	K.M.M.
CHECKED BY:	K.A.W.
APPROVED BY:	J.C.H.
PROJECT NUMBER	100024290
DRAWING NUMBER	C-115

T:\Emerald Coast Conference Center\00004695\roadway\Signing & Pavement Marking Sheet.dgn
7/23/2012 11:50:01 AM
22/10

TRAFFIC CONTROL GENERAL NOTES:

1. TRAFFIC CONTROLS SHALL BE IN ACCORDANCE WITH THE CURRENT EDITION OF THE FLORIDA DEPARTMENT OF TRANSPORTATION (F.D.O.T.)DESIGN STANDARD INDEX NOS. 600 – 670 AND THE MANUAL FOR UNIFORM TRAFFIC CONTROL DEVICES (M.UT.C.D.).

2. ANY INTERRUPTIONS TO NORMAL TRAFFIC PATTERNS FOR SANTA ROSA BLVD., MARLER PARK, OR THE CONFERENCE CENTER SHALL BE COORDINATED AND SCHEDULED WITH THE COUNTY ENGINEER AND THE EMERAL COAST CONFERENCE CENTER GENERAL MANGER PROIR TO BEGINING CONSTRUCTION OR INSTALLATION OF TRAFFIC CONTROL DEVICES.

3. CONFLICTING OR MISLEADING PAVEMENT MARKINGS SHALL BE REMOVED BY WATER BLASTING OR OTHER METHODS APPROVED BY THE COUNTY. ALL EXISTING PAVEMENT MARKINGS OUTSIDE THE LIMITS OF CONSTRUCTION, WHICH ARE ALTERED SHALL BE REPLACED UPON COMPLETION OF THE PROJECT. ALL COST SHALL BE INCLUDED IN THE BID PRICE FOR MAINTENANCE OF TRAFFIC. REMOVAL OF EXISTING PAVEMENT MARKINGS AND APPLICATION OF REMOVABLE OR TEMPORARY PAVEMENT MARKINGS SHALL BE COMPLETED IN ACCORDANCE WITH INDEX NO. 600.

4. TRAFFIC CONDITIONS, ACCIDENTS AND OTHER UNFORESEEN EMERGENCY CONDITIONS MAY REQUIRE THE THE COUNTY ENGIEER TO RESTRICT OR REMOVE TRAFFIC CONTROL DEVICES DURING CONSTRUCITON. THE CONTRACTOR SHALL RESPOND AND PROVIDE ADJUSTMENTS AS DIRECTED BY THE COUNTY ENGINEER WITHOUT DELAY UNDER THESE CONDITIONS. THE CONTRACTOR SHALL ALSO RESPOND WITHIN TIME CONSTRAINTS OUTLINED IN THE STANDARD SPECIFICATIONS UPON NOTIFICATION BY THE COUNTY ENGIEER TO ANY REQUESTS FOR CORRECTION, IMPROVEMENT OR MODIFICATION TO THE TRAFFIC CONTROL PLAN AND/OR DEVICES. PAYMENT FOR THIS SERVICE SHALL BE INCLUDED THE BID PRICE FOR MAINTENANCE OF TRAFFIC

5. ALL ACCESS MUST BE REOPENED TO NORMAL TRAFFIC WITHIN 12 HOURS AFTER RECEIVING NOTIFICATION OF A HURRICANE EVACUATION OR ANY OTHER CATASTROPHIC EVENT AND SHALL REMAIN OPEN FOR THE DURATION OF THE EVACUATION OR EVENT AS DIRECTED BY THE COUNTY ENGINEER.

6. CONTRACTOR SHALL MAINTAIN AND KEEP SIDEROAD NAME IDENTIFICATION VISIBLE DURING CONSTRUCTION IN ORDER TO FACILITATE EMERGENCY VEHICLE TRAFFIC.

7. THE CONTRACTOR WILL NOT BE PERMITTED TO HINDER TRAFFIC MOVEMENT BY BLOCKING OR PARTIALLY BLOCKING ANY TRAFFIC TO THE PARK ENTRANCE OR CONFERENCE CENTER.

8. THE CONTRACTOR SHALL MAKE SURE THAT WORK WITHIN THE ROADWAY RIGHT OF WAY, PARK, AND CONFERENCE CENTER AREA IS TRAVERSABLE BY PEDESTRIANS AND VEHICLES BY THE END OF EACH WORKDAY.

9. THE CONTRACTOR SHALL NOT BE ALLOWED TO CLOSE THE BOAT RAMP MORE THAT 24 HOURS AT A TIME AND WILL NOT BE ALLOWED TO CLOSE THE BOAT RAMPS DURING WEEKENDS, HOLIDAYS, OR SPECIAL EVENTS.

CONSTRUCTION SEQUENCE

1. INSTALL TRAFFIC CONTROL DEVICES AT THE BEGINNING AND END OF THE PROJECT AS SHOWN IN T.C.P. PHASE 1 DETAIL 1.
2. INSTALL AND MAINTAIN EROSION CONTROL DEVICES THROUGHOUT THE CONSTRUCTION.
3. RESTRICT BOAT RAMP ACCESS AND CONSTRUCT POND 2 OUTFALL PIPE.
4. REOPEN BOAT RAMP FACILITY.
5. CONSTRUCT PROPOSED STORMWATER PONDS AND REMAINING POND OUTFALLS.
6. CONSTRUCT BOAT PARKING, ACCESS ROAD, AND EXHIBIT HALL.
7. MAINTAIN TRAFFIC ACCORDING TO FDOT DESIGN STANDARDS. MILL AND RESURFACE THE PORTION OF THE SANTA ROSA BLVD. TRAFFIC CIRCLE AS DEPICTED IN PLANS. NEW BOAT RAMP ENTRANCE.
8. INSTALL PROPOSED PAVEMENT STRIPING AND SIGNING ACCORDING PLANS.
9. REMOVE ALL T.C.P. SIGNAGE AND DEVICES ONCE PROJECT HAS BEEN COMPLETED AND ACCEPTED BY THE COUNTY ENGINEER.

RECEIVED
SEP 06 2012
NWFWMD

NUMBER	REVISIONS	DATE	APPROVED BY

MARLER PARK BOAT RAMP PARKING AND OUTDOOR EXHIBIT AREA

TRAFFIC CONTROL

ATKINS
2114 Airport Blvd., Suite 1450, Pensacola, Florida 32504
Phone No. 850.478.9844

SCALE:	
DRAWN BY:	K.M.M.
DESIGNED BY:	K.M.M.
CHECKED BY:	K.A.W.
APPROVED BY:	J.C.H.
PROJECT NUMBER	100024290
DRAWING NUMBER	C-116

T:\Emerald Coast Conference Center\00004695\roadway\Traffic Control.dgn 7:37:55 AM 7/23/2012 22110

ELECTRICAL GENERAL NOTES

1. CONTRACTOR SHALL COORDINATE ALL WORK WITH OTHER TRADES PRIOR TO INSTALLATION. REFER TO MECHANICAL AND PLUMBING DRAWINGS FOR EXACT SIZE AND LOCATION OF EQUIPMENT WHICH IS FURNISHED BY OTHERS AND CONNECTED BY ELECTRICAL.
2. RECEPTACLES, SWITCHES AND COVERPLATES COLOR SHALL BE SELECTED BY THE ARCHITECT FROM STANDARD COLORS.
3. LOCATION OF LIGHTING FIXTURES, DISCONNECT SWITCHES, ETC. FOR MECHANICAL EQUIPMENT/ROOM SHALL BE COORDINATED WITH FINAL MECHANICAL EQUIPMENT LOCATION TO PROVIDE NATIONAL ELECTRIC CODE REQUIRED ACCESS SPACE.
4. FINAL CONNECTION TO ALL MOTORS SHALL BE WITH FLEXIBLE CONDUIT CONNECTION.
5. ALL EXIT AND EMERGENCY FIXTURES SHALL BE CONNECTED TO LIGHT CIRCUIT AHEAD OF LOCAL SWITCH.
6. ALL PANELBOARDS, BACKBOARDS, TERMINAL CABINETS, ETC SHALL HAVE CUSTOM ENGRAVED MICARTA NAMEPLATE AFFIXED IDENTIFYING SYSTEM.
7. GENERAL CONTRACTOR SHALL FIELD-VERIFY ALL EXISTING CONDITIONS PRIOR TO BEGINNING ANY WORK, AND SHALL IMMEDIATELY NOTIFY THE ARCHITECT OF ANY DISCREPANCIES. FAILURE TO DO SO INDICATES THAT THE CONTRACTOR ACCEPTS THE CONDITIONS AS THEY EXIST, AND SHALL PERFORM THE WORK REQUIRED AS SHOWN AND SPECIFIED.
8. THE ELECTRICAL CONTRACTOR SHALL OBTAIN AND REVIEW THE MECHANICAL AND SPECIAL EQUIPMENT SUBMITTALS PRIOR TO SUBMITTING THE ELECTRICAL SUBMITTALS. ANY ELECTRICAL EQUIPMENT, CONDUIT, AND WIRE SIZE CHANGES RESULTING FROM THIS REVIEW SHALL ALSO BE SUBMITTED FOR APPROVAL.
9. COMPLY WITH ALL LOCAL CODE, LAWS, AND ORDINANCES APPLICABLE TO ELECTRICAL WORK, THE STATE BUILDING CODE AND THE NATIONAL ELECTRIC CODE. OBTAIN ALL PERMITS REQUIRED BY LOCAL ORDINANCES.
10. OBTAIN ARCHITECTS APPROVAL OF ALL LIGHT FIXTURES, SWITCHES, RECEPTACLES, PANELBOARDS, ETC. PRIOR TO PURCHASING.
11. FURNISH ALL EQUIPMENT AND LABOR, PERFORM ALL LABOR WITH SUPERVISION, BEAR ALL EXPENSES, AS NECESSARY FOR THE SATISFACTORY COMPLETION OF ALL WORK READY FOR OPERATION.
12. THE ELECTRICAL WORK SHALL BE INSTALLED IN A NEAT AND WORKMANLIKE MANNER. ALL NOT SO INSTALLED SHALL BE REMOVED AND REPLACED AT NO COST TO THE OWNER.
13. EQUIPMENT GROUNDING CONDUCTOR SHALL BE PULLED IN ALL BRANCH CIRCUIT WIRING. CONDUIT GROUND SHALL NOT BE ACCEPTABLE.
14. PROVIDE GROUNDING PER NATIONAL ELECTRIC CODE.
15. THE CONTRACTOR SHALL LEAVE THE ENTIRE ELECTRICAL SYSTEM INSTALLED IN PROPER WORKING ORDER, AND SHALL REPLACE WITHOUT ADDITIONAL COST, ALL WORK OR MATERIAL WHICH MAY DEVELOP DEFECTS, (ORDINARY WEAR AND TEAR OR DAMAGE RESULTING FROM IMPROPER HANDLING EXCEPTED) WITHIN A PERIOD OF ONE(1) YEAR FROM THE DATE OF FINAL ACCEPTANCE BY THE OWNER.

CIRCUIT BREAKER PANEL SCHEDULE
PANEL M

120/208 VOLT 3ø 4W
800 AMP MAIN BREAKER

SURFACE MOUNTED
NEMA 1 ENCLOSURE

CKT	LOAD DESCRIPTION	BREAKER POLE	BREAKER AMP	LOAD KVA		BREAKER AMP	BREAKER POLE	LOAD DESCRIPTION	CKT
1	POLE LIGHTS	2	30	4.32	4.32	30	2	POLE LIGHTS	2
3	↑	↑	↑			↑	↑	↑	4
5	POLE LIGHTS	2	30	4.32	4.32	30	2	POLE LIGHTS	6
7	↑	↑	↑			↑	↑	↑	8
9	REC-INTERIOR	1	20	.36	.18	20	1	REC-EXTERIOR	10
11	REC-EXTERIOR	1	20	.18	.21	20	1	LTS-INTERIOR	12
13	BOLLARD LIGHTS	2	20	1.56	.72	20	1	REC-COMM BACKBOARD	14
15	↑	↑	↑			↑	↑	↑	16
17	SPARE	1	20			--	3	SPACE ONLY	18
19	SPARE	1	20			↑	↑	↑	20
21	SPARE	1	20			↑	↑	↑	22
23	SPARE	1	20			--	3	SPACE ONLY	24
25	SPARE	1	20			↑	↑	↑	26
27	SPARE	2	30	57.6		20	2	SPARE	28
29	↑	↑	↑			↑	↑	↑	30
31	↑	↑	↑			↑	↑	↑	32
33	SHOW AUDIO	3	200	57.6		200	3	SPARE	34
35	↑	↑	↑			↑	↑	↑	36
37	↑	↑	↑			↑	↑	↑	38
39	SHOW LIGHTING	3	400	115.2		30	3	SURGE SUPPRESSOR	40
41	↑	↑	↑			↑	↑	↑	42

TOTAL CONNECTED LOAD: 192.57 KVA
MINIMUM INTERRUPTING CAPACITY: 42,000 AMPS SYMMETRICAL

ELECTRICAL LEGEND

CEILING OUTLETS

"FS" PENDANT MOUNTED FLUORESCENT STRIP FIXTURE MARK "FS" AS NOTED

"FSE" PENDANT MOUNTED FLUORESCENT STRIP FIXTURE MARK "FSE" AS NOTED, WITH EMERGENCY UNIT BATTERY PACK

WALL OUTLETS

DUPLEX RECEPTACLE – 20 AMP, 125 VOLT, 2 POLE, 3 WIRE GROUNDED TYPE, NEMA 5-20R. MOUNT 18" A.F.F. UNLESS NOTED OTHERWISE

G DUPLEX RECEPTACLE – 20 AMP, 125 VOLT, GFI, 2 POLE, 3 WIRE GROUNDED TYPE, NEMA 5-20R. MOUNT 18" A.F.F. UNLESS NOTED OTHERWISE

WP DUPLEX RECEPTACLE – 20 AMP, 125 VOLT, GFI, 2 POLE, 3 WIRE GROUNDED TYPE, NEMA 5-20R. MOUNT 18" A.F.F. UNLESS NOTED OTHERWISE; PROVIDE WEATHERPROOF BOX FOR RECEPTACLE

P SIDEWALL PHOTOCELL EQUAL TO TORK #2101 (120V)

BRANCH CIRCUITING

RUN CONCEALED UNDER FLOOR OR IN GRADE

RUN CONCEALED IN CEILING OR WALLS

LA-1 HOMERUN TO PANEL. ANY CIRCUIT WITHOUT FURTHER IDENTIFICATION INDICATES 2 #12, 1 #12 GROUND – 1/2" C; 3 #12, 1 #12 GROUND – 1/2" C; 4 #12, 1 #12 GROUND – 1/2" C; ETC. AS PER NEC. LETTERS AND NUMERALS INDICATE PANEL AND CIRCUIT NUMBER.

LIQUID-TIGHT FLEXIBLE CONDUIT CONNECTION

SURFACE MOUNTED CONDUIT; RUN PARALLEL OR PERPINDICULAR TO BUILDING LINES

SITE LIGHTING

BOLLARD LIGHT; SEE MOUNTING DETAIL SHEET E-200

POLE MOUNTED HID LIGHTING FIXTURES

PANELS AND POWER

120/208 VOLT PANELBOARD

NON-FUSIBLE DISCONNECT SWITCH; XX/YY/ZZ WHERE X INDICATES AMPERAGE, Y INDICATES # OF POLES, AND Z INDICATES NEMA RATING

MISCELLANEOUS

A.F.F. ABOVE FINISH FLOOR

WP WEATHERPROOF

U.N.O. UNLESS NOTED OTHERWISE

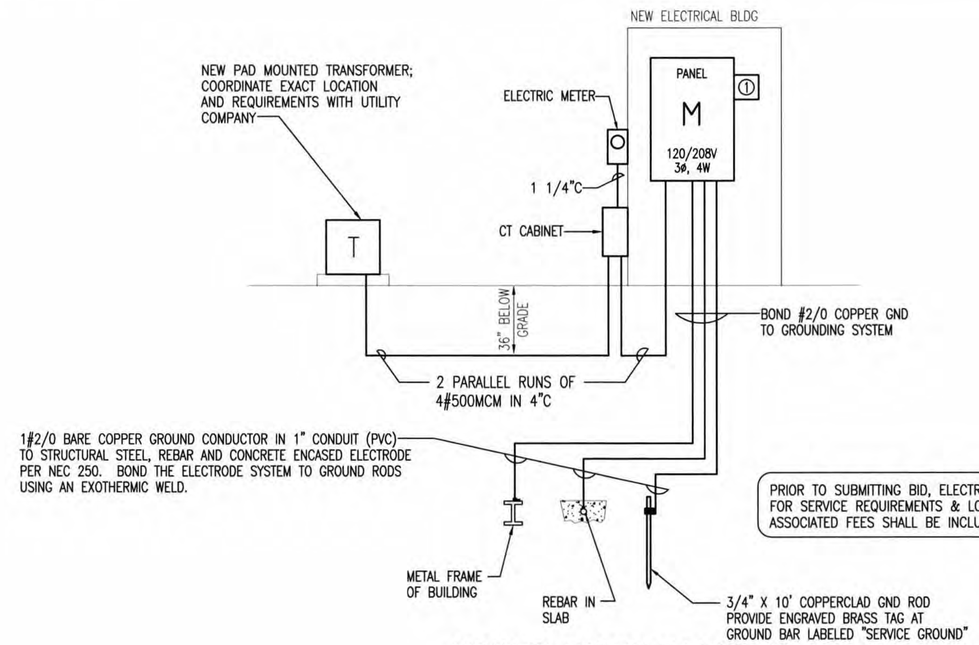

PRIOR TO SUBMITTING BID, ELECTRICAL CONTRACTOR SHALL COORDINATE WITH ALL UTILITIES FOR SERVICE REQUIREMENTS & LOCATIONS, CONDUIT TERMINATION POINTS, & FEES...ALL ASSOCIATED FEES SHALL BE INCLUDED IN BID.

POWER RISER DIAGRAM

NOT TO SCALE

POWER RISER DIAGRAM KEY NOTES:

① SURGE SUPPRESSOR; INSTALL PER MANUFACTURER'S RECOMMENDATIONS

ALL FIXTURES CONSIDERED EQUAL TO THE SPECIFIED FIXTURES SHALL BE SUBMITTED TO THE ARCHITECT/ENGINEER 10 DAYS PRIOR TO BID FOR APPROVAL

LIGHTING FIXTURE SCHEDULE

MARK	MANUFACTURER AND CATALOG No.	LAMPS		MOUNTING	REMARKS
BL	GARDCO#BR800-42-100PSMH-(FINISH)	1	100W MH	IN GROUND SEE DETAIL	VANDAL RESISTANT ROUND BOLLARD, DOMED TOP, 208V
FS	DAY-BRITE HDS232-UNV-1/2-EB101-CS4	2	F32	PENDANT @ 8'-0"	4 FT. FLUORESCENT STRIP, ELECTRONIC BALLAST, 120V
FSE	DAY-BRITE HDS232-UNV-1/2-EB101-CS4	2	F32	PENDANT @ 8'-0"	4 FT. FLUORESCENT STRIP, ELECTRONIC BALLAST, 120V, EMERGENCY UNIT BATTERY PACK
SL4	DAYBRITE#LGL-10X-M-20-LLG-1M-N4	1	1000W MH	POLE MOUNT	SPORTSLITER SYSTEM LIGHTING, NEMA TYPE 4 BEAM DISTRIBUTION, 208V
SL5	DAYBRITE#LGL-10X-M-20-LLG-1M-N5	1	1000W MH	POLE MOUNT	SPORTSLITER SYSTEM LIGHTING, NEMA TYPE 5 BEAM DISTRIBUTION, 208V
POLE	STRESSCRETE#E-400-CPR-G-M00-ACX	–	–	CONCRETE BASE SEE DETAIL	

RECEIVED
SEP 06 2012
NWFWMD

PRELIMINARY SUBMITTAL
NOT FOR CONSTRUCTION

BYA Bagwell Yates & ASSOCIATES CONSULTING ENGINEERS
216 E. Government St.
Pensacola FL 32502
FBPE Authorization No. 9617
PH: (850)939-3863
Email: admin@bagwellyates.com
FL PE No.-59251 & 60826

NUMBER	REVISIONS	DATE	APPROVED BY

MARLER PARK BOAT RAMP PARKING AND OUTDOOR EXHIBIT AREA
ELECTRICAL LEGEND
DETAILS & NOTES

ATKINS
2114 Airport Blvd., Suite 1450 Pensacola, Florida 32504
Phone No. 850.478.9844

KEVIN MORGAN LICENSE No. 71554 STATE OF FLORIDA PROFESSIONAL ENGINEER

SCALE:	AS NOTED
DRAWN BY:	DLM
DESIGNED BY:	DLM
CHECKED BY:	DMB
APPROVED BY:	DMB
PROJECT NUMBER	100024290
DRAWING NUMBER	E-001

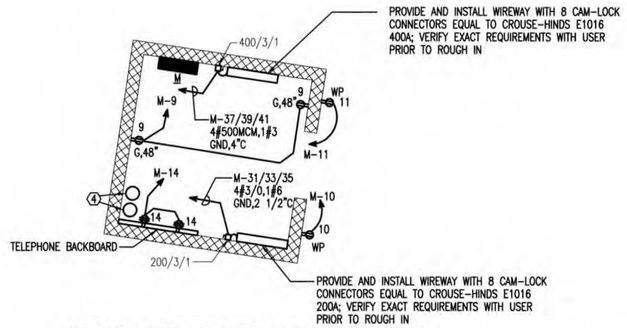

ELECTRICAL BLDG-POWER PLAN

SCALE: 1/4" = 1'-0"

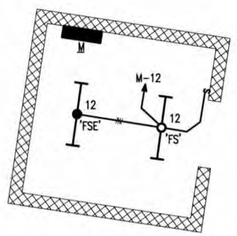

ELECTRICAL BLDG-LIGHTING PLAN

SCALE: 1/4" = 1'-0"

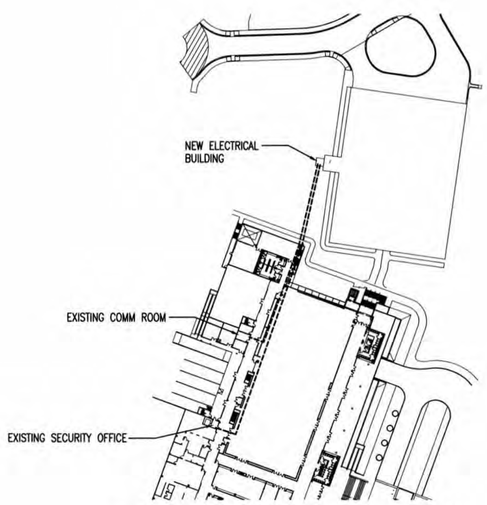

COMM CONDUIT ROUTING PLAN

SCALE: 1" = 100'-0"

NOTE TO CONTRACTOR:
UTILITY COMPANY TO PROVIDE TRANSFORMER; CONTRACTOR SHALL COORDINATE WITH LOCAL UTILITY COMPANY FOR TRANSFORMER LOCATION AND ALL REQUIREMENTS PRIOR TO BID. CONTRACTOR TO INSTALL SECONDARY FROM TRANSFORMER LOCATION TO BUILDING.

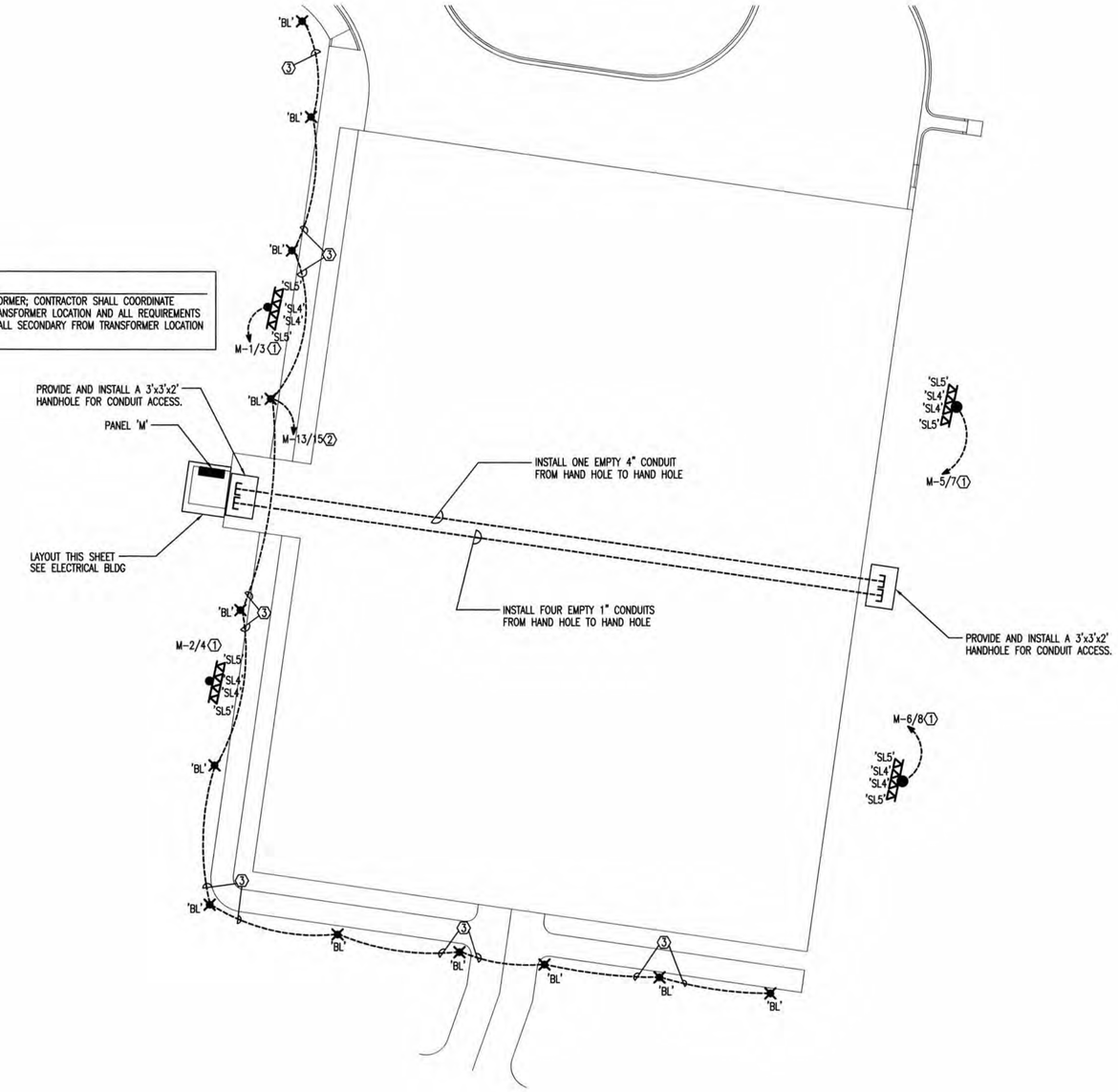

SITE LIGHTING PLAN

SCALE: 1" = 20'-0"

KEYNOTES:

1. INSTALL 2#8,1#8 GND IN 1" CONDUIT; ROUTE CIRCUIT THROUGH TENT AREA LIGHTING CONTACTOR. SEE TENT AREA LIGHTING CONTROL DIAGRAM SHEET E-200.
2. INSTALL 2#10,1#10 GND IN 3/4" CONDUIT; ROUTE CIRCUIT THROUGH BOLLARD LIGHTING CONTACTOR. SEE BOLLARD LIGHTING CONTROL DIAGRAM SHEET E-200.
3. INSTALL 2#10,1#10 GND IN 3/4" CONDUIT.
4. INSTALL ONE 4" CONDUIT WITH INNERDUCTS BACK TO MAIN COMM ROOM IN CONFERENCE CENTER AND ONE 4" CONDUIT WITH INNERDUCTS BACK TO SECURITY OFFICE. SEE COMM CONDUIT ROUTING PLAN FOR APPROXIMATE ROUTE AND COMM ROOM LOCATION. INSTALL ONE RG11 CABLE, ONE SIAMESE COAX, ONE PA SYSTEM CABLE AND ONE FIBER OPTIC CABLE FOR COMMUNICATIONS. REFER TO COMMUNICATIONS DETAILS & RISERS ON SHEET E-300 FOR MORE INFORMATION.

RECEIVED
SEP 06 2012
NWFWMD

PRELIMINARY SUBMITTAL
NOT FOR CONSTRUCTION

BYA Bagwell Yates & ASSOCIATES
CONSULTING ENGINEERS
216 E. Government St.
Pensacola FL 32502
FBPE Authorization No. 9617
PH: (850)939-3863
Email: admin@bagwellyates.com
FL PE No.-59251 & 60826

NUMBER	REVISIONS	DATE	APPROVED BY

MARLER PARK BOAT RAMP PARKING AND OUTDOOR EXHIBIT AREA

ELECTRICAL PLANS

ATKINS
2114 Airport Blvd., Suite 1450 Pensacola, Florida 32504
Phone No. 850.478.9844

SCALE:	AS NOTED
DRAWN BY:	DLM
DESIGNED BY:	DLM
CHECKED BY:	DMB
APPROVED BY:	DMB
PROJECT NUMBER	100024290
DRAWING NUMBER	E-100

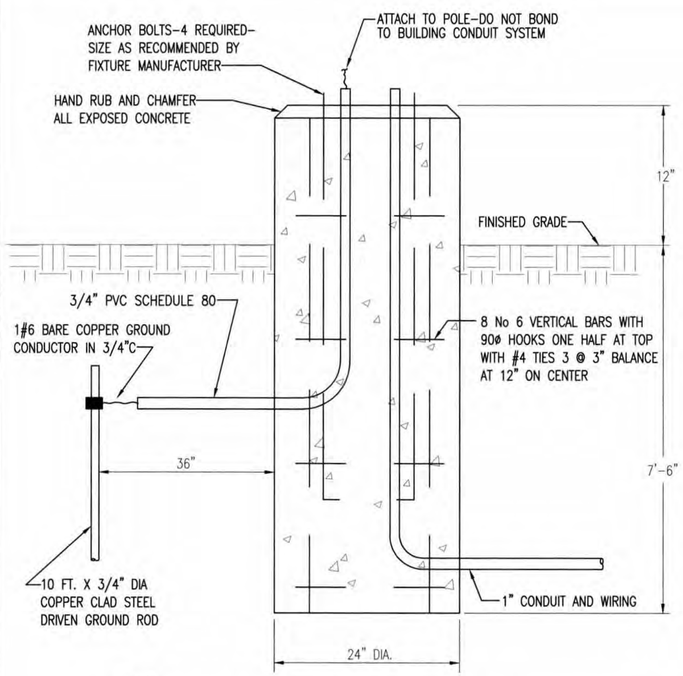

NOTES:

- INSTALL CONCRETE POLE BASE ACCORDING TO MANUFACTURER'S RECOMMENDATIONS
- VERIFY BOLT CIRCLE PATTERN WITH MANUFACTURER

CONCRETE POLE BASE DETAIL

NOT TO SCALE

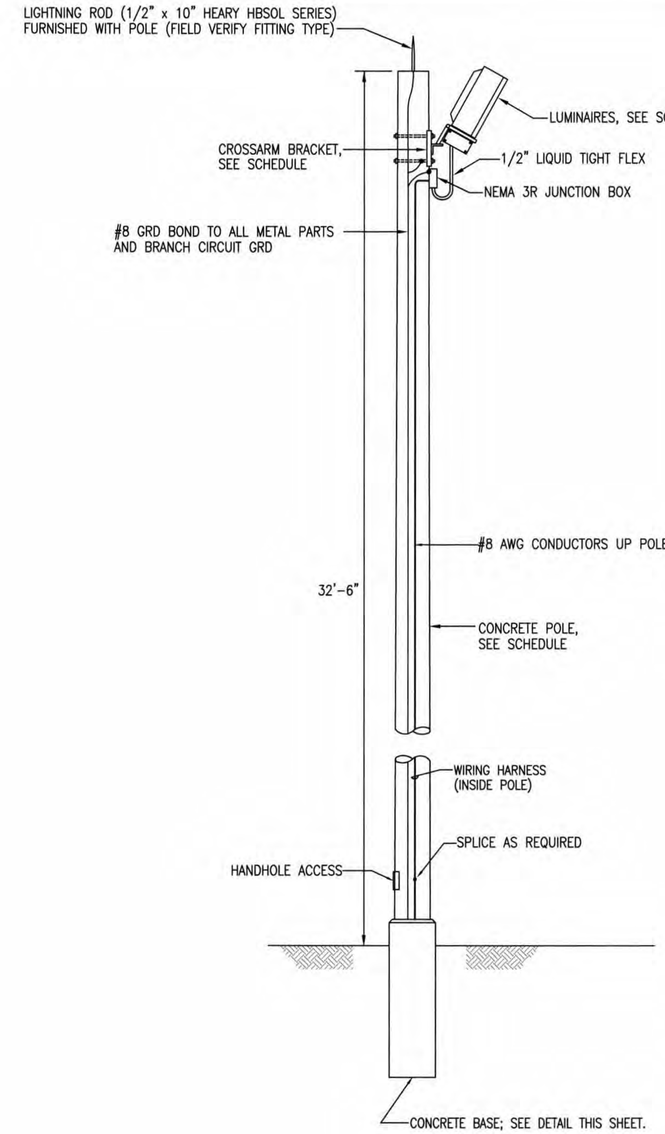

POLE DETAIL

N.T.S.

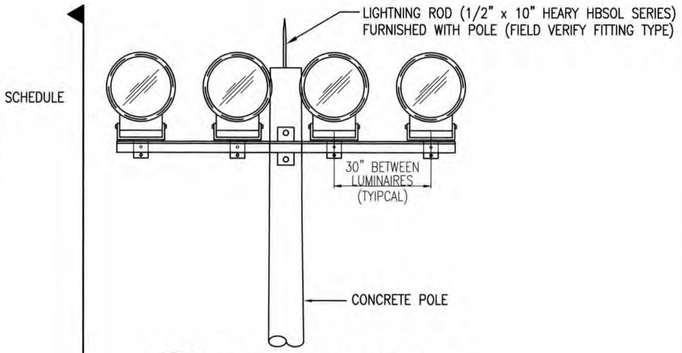

A / E-200 ELEVATION OF POLE

N.T.S.

A / E-200

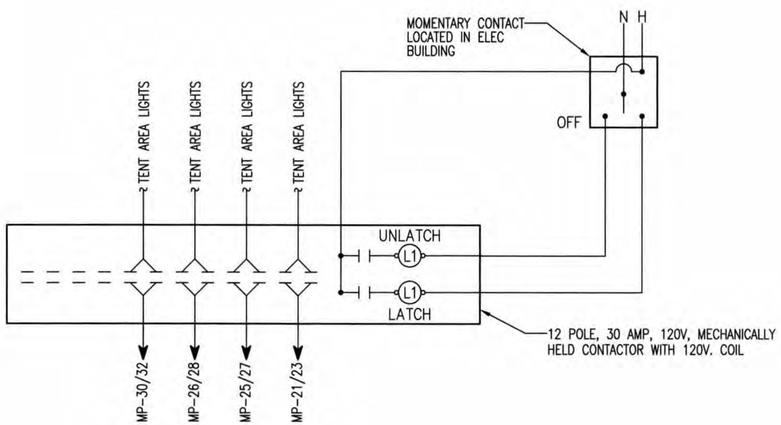

TENT AREA LIGHTING CONTROL DIAGRAM

NOT TO SCALE

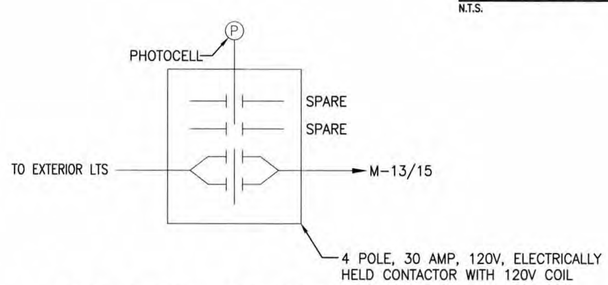

BOLLARD LIGHTING CONTROL DIAGRAM

NOT TO SCALE

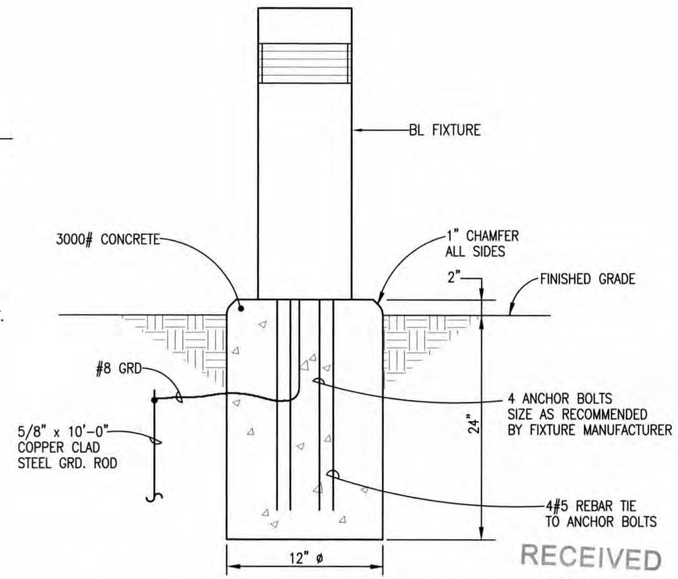

CONCRETE POLE BASE FOR FIXTURE 'BL'

NOT TO SCALE

RECEIVED
SEP 06 2012
NWFWMD

PRELIMINARY SUBMITTAL
NOT FOR CONSTRUCTION

BYA Bagwell Yates & ASSOCIATES CONSULTING ENGINEERS
216 E. Government St.
Pensacola FL 32502
FBPE Authorization No. 9617
PH: (850)939-3863
Email: admin@bagwellyates.com
FL PE No.-59251 & 60826

NUMBER	REVISIONS	DATE	APPROVED BY

MARLER PARK BOAT RAMP PARKING AND OUTDOOR EXHIBIT AREA

ELECTRICAL DETAILS

ATKINS
2114 Airport Blvd., Suite 1450 Pensacola, Florida 32504
Phone No. 850.478.9844

SCALE:	AS NOTED
DRAWN BY:	DLM
DESIGNED BY:	DLM
CHECKED BY:	DMB
APPROVED BY:	DMB
PROJECT NUMBER	100024290
DRAWING NUMBER	E-200

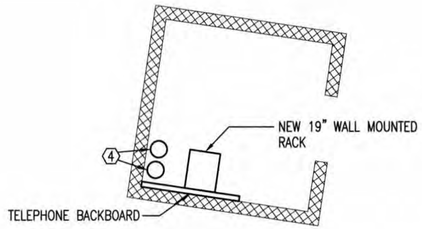

ELECTRICAL BLDG-POWER PLAN

SCALE: 1/4" = 1'-0"

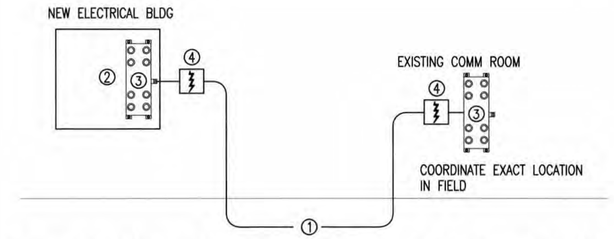

TV BACKBONE COMMUNICATIONS RISER

NOT TO SCALE

TV BACKBONE RISER SYSTEM NOTES:

① INSTALL A RG-11 OSP CABLE IN THE NEW 4" CONDUIT TO COMM ROOM.

② TELECOMM BACKBOARD

③ 1:8 SPLITTER. MOUNT SPLITTER ON BACKBOARD.

④ SURGE PROTECTOR

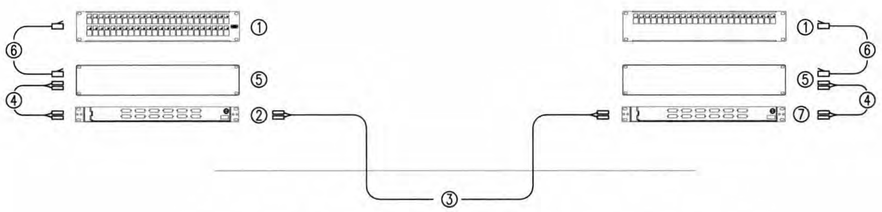

DATA COMMUNICATIONS RISER

NOT TO SCALE

DATA RISER NOTES:

① EXISTING PATCH PANEL. COORDINATE EXACT LOCATION IN FIELD.

② 24 PORT 19" WIDE FIBER ENCLOSURE WITH 'SC' CONNECTIONS. INSTALL IN EXISTING COMMUNICATIONS RACK.

③ INSTALL A 4 STRAND 50/125uM MULTIMODE FIBER OPTIC CABLE IN NEW 4" CONDUIT TO COMMUNICATIONS ROOM.

④ FIBER OPTIC PATCH CORDS. 50/125 MULTIMODE DUAL FIBER, PROVIDE DUPLEX 'SC' CONNECTORS AT BOTH ENDS. COLOR SHALL BE ORANGE. PROVIDE LENGTHS AND QUANTITIES AS SHOWN IN THE PATCH CORD SCHEDULE. FIBER PATCH CABLES SHALL HAVE MINIMAL SLACK.

⑤ NEW FIBER MEDIA CONVERTER

⑥ EQUIPMENT PATCH CORDS. CATEGORY 6, FOUR-PAIR 100-OHM UTP CABLE WITH STRANDED COPPER CONDUCTORS. CABLES SHALL BE FACTORY TERMINATED AND TESTED. PROVIDE LENGTHS AND QUANTITIES AS SHOWN IN THE PATCH CORD SCHEDULE. PATCH CORD COLOR SHALL BE GRAY. PATCH CORD CONNECTIONS SHALL HAVE MINIMAL SLACK.

⑦ NEW 19" WIDE FIBER ENCLOSURE WITH 'SC' CONNECTIONS INSTALL IN NEW WALL MOUNTED RACK

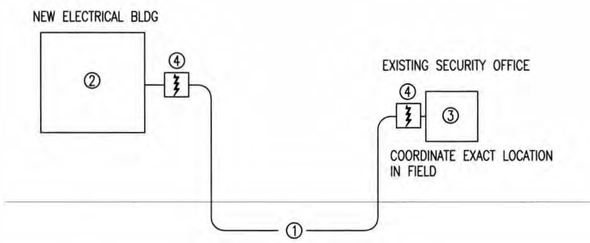

PA SYSTEM RISER

NOT TO SCALE

TV BACKBONE RISER SYSTEM NOTES:

① INSTALL A 22/4 STRANDED BARE COPPER CONDUCTORS, SHIELDED/UNSHILEDED WITH AN OVERALL JACKET IN NEW 4" CONDUIT TO SECURITY OFFICE.

② TELECOMM BACKBOARD

③ EXISTING PA SYSTEM HEAD END UNIT

④ SURGE PROTECTOR

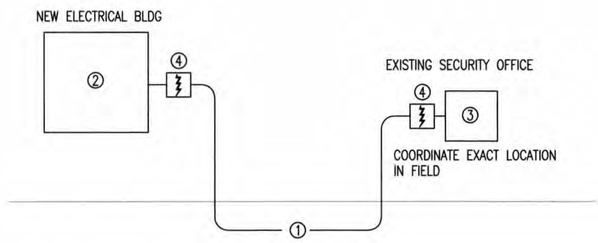

CCTV RISER

NOT TO SCALE

TV BACKBONE RISER SYSTEM NOTES:

① INSTALL A RG-6+2C CCTV SIAMESE CABLE IN THE NEW 4" CONDUIT TO TO SECURITY OFFICE.

② TELECOMM BACKBOARD

③ EXISTING CCTV HEAD END UNIT

④ SURGE PROTECTOR

RECEIVED
SEP 06 2012
NWFWMD

PRELIMINARY SUBMITTAL
NOT FOR CONSTRUCTION

BYA Bagwell Yates & ASSOCIATES CONSULTING ENGINEERS
216 E. Government St.
Pensacola FL 32502
FBPE Authorization No. 9617
PH: (850)939-3863
Email: admin@bagwellyates.com
FL PE No.-59251 & 60826

NUMBER	REVISIONS	DATE	APPROVED BY

MARLER PARK BOAT RAMP PARKING AND OUTDOOR EXHIBIT AREA

COMMUNICATION DETAILS

ATKINS
2114 Airport Blvd., Suite 1450 Pensacola, Florida 32504
Phone No. 850.478.9844

SCALE:	AS NOTED
DRAWN BY:	DLM
DESIGNED BY:	DLM
CHECKED BY:	DMB
APPROVED BY:	DMB
PROJECT NUMBER	100024290
DRAWING NUMBER	E-300

GENERAL NOTES

DESIGN CRITERIA

1 STRUCTURAL WORK SHALL BE IN ACCORDANCE WITH FLORIDA BUILDING CODE 2010, AS ADOPTED AND SUPPLEMENTED BY LOCAL REGULATIONS.

2 VERIFY ALL DIMENSIONS AND SITE CONDITIONS PRIOR TO STARTING CONSTRUCTION. NOTIFY THE A/E OF ANY DISCREPANCIES OR INCONSISTENCIES.

3 DO NOT SCALE DRAWINGS

4 SEE ARCHITECTURAL, CIVIL, MECHANICAL, ELECTRICAL AND PLUMBING DRAWINGS FOR MISCELLANEOUS WOOD & STEEL MEMBERS & CONNECTIONS NOT SHOWN HERE IN.

5 SEE ARCHITECTURAL, CIVIL, MECHANICAL, ELECTRICAL & PLUMBING DRAWINGS FOR ANCHORED, SUPPORTED AND EMBEDDED ITEMS AFFECT THE STRUCTURAL WORK. VERIFY DETAILS AND DIMENSIONS WITH EQUIPMENT PURCHASED

6 COORDINATE SIZES AND LOCATIONS OF OPENINGS IN FLOORS, WALLS AND ROOF WITH, ARCHITECTURAL, MECHANICAL, ELECTRICAL AND PLUMBING REQUIREMENTS.

7 NO STRUCTURAL MEMBER SHALL BE CUT, NOTCHED OR OTHERWISE ALTERED UNLESS APPROVED IN WRITING BY THE ENGINEER OF RECORD.

8 REFERENCE W/ TOP OF SLAB "FIRST FLOOR", FINISH FLOOR EQUAL TO 0'-0" WHERE NOTED. VERIFY ALL ACTUAL ELEVATIONS W/ CIVIL DRAWINGS.

9

GRAVITY LOADS			
LOCATION	UNIFORM LIVE LOAD	CONCENTRATED LIVE LOAD	UNIFORM DEAD LOAD
ROOF	20 PSF	---	
CORRIDORS	100 PSF	2000 lbs	
OFFICES	100 PSF	---	
PARTITIONS	20 PSF	---	
STAIRS	100 PSF	300 lbs	
ASSEMBLY AREAS	150 PSF	2000 lbs	SELF WEIGHT + SUPERIMPOSED PER PLAN
MECH. & ELEC. ROOMS	125 PSF	2000 lbs	
DESIGN VEHICLES		AASHTO HS 20-44	

LIVE LOAD REDUCTION ON SUPPORTING ELEMENTS SHALL BE IN ACCORDANCE WITH THE BUILDING CODE. NO LIVE LOAD REDUCTION OF ROOF LOADING IS PERMITTED. UNIFORMED DEAD LOAD IS ADDITIVE TO ACTUAL STRUCTURAL WEIGHTS

10 TRANSIENT LOADS

WIND LOADS ASCE 7-10	
BASIC WIND SPEED (3 SECOND GUST)	170 MPH
WIND IMPORTANCE FACTOR Iw	1.0
BUILDING OCCUPANCY CATEGORY	II
WIND EXPOSURE	C
INTERNAL PRESSURE COEFFICIENT (ENCLOSED)	±0.18

COMPONENTS & CLADDING DESIGN WIND PRESSURE *q SEE BLDG'S ROOF UPLIFT PLAN & WALL WIND LOAD TABLES FOR APPLICABLE PRESSURES.

SOIL PREPARATION

1 PREPARE SOIL IN ACCORDANCE WITH PROCEDURES DIRECTED BY SPECIFICATIONS & GEOTECHNICAL REPORT BY PSI, INC. REPORT PROJECT N0. 783-85062, DATED NOV. 4, 2008

2 REMOVE FREE WATER FROM EXCAVATIONS BEFORE PLACING CONCRETE.

3 REMOVE EXISTING TOP SOIL, FILL, PAVEMENT OR FOUNDATIONS FROM THE BUILDING AREA AS REQ'D.

4 PROVIDE SOIL POISONING UNDER BUILDINGS FOR TERMITE PROTECTION.

5 REINFORCING SHALL BE SUPPORTED WITH METHODOLOGY APPROVED BY E.O.R.

6 ALLOWABLE BEARING CAPACITY FOR PIERS IS 30,000 PSF. FINAL BEARING CAPACITY SHALL BE VERIFIED BY A LICENSED SOILS ENGINEER.

CAST IN PLACE CONCRETE

1 CONCRETE WORK SHALL CONFORM TO ACI SPECIFICATIONS FOR STRUCTURAL CONCRETE FOR STRUCTURES & BUILDINGS, ACI 301, LATEST EDITION REFERENCED IN BUILDING CODE, ACI 318-08.

2 THE CONCRETE REQUIRMENTS ARE:

A. CEMENT SHALL BY TYPE I OR II CONFORMING TO ASTM C150.

B. FINE AND COARSE AGGREGATES SHALL CONFORM TO ASTM C33.

C. MIX REQUIREMENTS ARE:

LOCATION	MIN. F'C PSI
FOUNDATIONS AND SLABS	3000
CONCRETE COLUMNS AND BEAMS	3000
ANCHOR CONCRETE SHAFTS	3000

CONCRETE CLEAR COVER OVER REINFORCING SHALL BE IN ACCORDANCE WITH ACI318-08 AS LISTED BELOW, UNLESS NOTED OTHERWISE.

LOCATION	CLEAR COVER
CAST AGAINST EARTH	3"
EXPOSED TO EARTH OR WEATHER #6 OR LARGER	2"
EXPOSED TO EARTH OR WEATHER #5 OR SMALLER	1½"
SLABS AND WALLS NOT EXPOSED TO WEATHER	3/4"
BEAMS AND COLUMNS NOT EXPOSED TO WEATHER	1½"
SLABS ON GRADE (COMES FORM TOP OF SLAB)	1½"

3 CONCRETE REINFORCING SHALL MEET THE FOLLOWING:

A. REINFORCING BARS SHALL CONFORM TO THE REQUIREMENTS OF ASTM A615 GRADE 60. REINFORCING BARS REQUIRED TO BE WELDED SHALL CONFORM TO THE REQUIREMENTS OF ASTM A706 GRADE 60.

B. WELDED WIRE FABRIC SHALL CONFORM TO THE REQUIREMENTS OF ASTM A185.

C. ALL REINFORCING SHALL BE CONTINUOUS. CONTINUOUS BARS SHALL LAP IN ACCORDANCE WITH TABLE ON SHEET S003 UNLESS NOTED OTHERWISE. PROVIDE ADDITIONAL BENT BARS AT ALL CORNERS.

D. WELDED WIRE FABRIC SHALL LAP ON FULL SQUARE PLUS 2"

E. SHOP DRAWINGS SHALL BE SUBMITTED WITH REINFORCING STEEL DETAILED IN ACCORDANCE WITH ACI 315

4 FORMING AND EMBEDMENTS SHALL MEET THE FOLLOWING:

A. ALL EXPOSED EDGES OF CONCRETE SHALL BE CHAMFERED 3/4" INSIDE FORMS OR TOOLED TO 3/4" RAD., UNLESS NOTED OTHERWISE.

B. SLABS ON GRADE SHALL HAVE CONSTRUCTION JOINTS AND CONTROL JOINTS (SAWN JOINTS), LOCATED AS SHOWN ON THE DRAWINGS. CONTRACTOR SHALL LOCATE SLAB JOINTS ON SHOP DRAWINGS.

C. WHERE NECESSARY, VERTICAL CONSTRUCTION JOINTS SHALL BE LOCATED AT MIDSPAN. ALL JOINTS SHALL BE THOROUGHLY CLEANED AND ROUGHENED TO 1/4" PRIOR TO PLACING ADJACENT CONCRETE.

D. THE CONTRACTOR SHALL BE RESPONSIBLE FOR THE DESIGN OF ALL FORMING, TEMPORARY BRACING AND SHORING.

E. ALUMINUM SHALL BE EMBEDDED IN CONCRETE & SHALL BE COATED WITH A BITUNASTIC PAINT PER THE SPECIFICATION. CONDUITS AND PIPING EMBEDDED IN CONCRETE SHALL BE SPACED A MINIMUM OF FOUR DIAMETERS AND THE OUTSIDE DIAMETER SHALL BE LESS THAN 30% OF THE MEMBER THICKNESS PLACED BETWEEN LAYERS OF REINFORCING.

5 AT CHANGES IN DIRECTION OF CONCRETE WALLS , FOOTINGS AND TIE BEAMS, PROVIDE CORNER BARS OF SAME SIZE AND SPACING AS HORIZONTAL STEEL AS SHOWN ON THE DRAWINGS.

6 WHERE PIPING PENETRATES CONCRETE BEAMS, PLACE TWO #3 STIRRUPS @ 3" O.C. EACH SIDE OF PIPE, UNLESS OTHERWISE NOTED.

7 PROVIDE STANDARD HOOKS AT DISCONTINUOUS ENDS OF TOP BAR.

8 PER APPENDIX G OF F AR190-11 ALL ARMS VAULT WALLS FOR CATEGORY II VAULTS MUST BE 8" THICK C.I.P. WALL W/ #4 @ 9" O.C. E.W. E.F. STAGGERED. ALL FLOOR SLABS ARE TO BE MIN. 6" THICK W/ 6x6 W4xW4 W.W.F. ALL ROOF SLABS ARE TO BE MIN. 6" THICK W/ #4 @ 9" O.C. E.W. E.F. TO LIMIT CONC. AREA BETWEEN BARS TO 96 in² MAX.

LIGHT GAUGE METAL

1 EXTERIOR WALLS TO UTILIZE A MINIMUM OF 14 GAGE @ 12" O.C. OR HEAVIER COLD FORMED FRAMING

2 ALL MEMBERS SHALL BE COLD FORMED FROM GALVANIZED STRUCTURAL QUALITY SHEET STEEL MEETING. 16 GAGE AND HEAVIER FY = 50 KSI (MIN) & 18 GA. & LIGHTER, FY=33KSI: MATERIAL SHALL MEET THE REQUIREMENTS OF ASTM A446 GRADE A OR ASTM A653.

3 ALL EXTERIOR MEMBERS SHALL HAVE A GALVANIZED FINISH COMPLYING WITH ASTM A525 G90 COATING

4 STRUCTURAL PROPERTIES OF STUDS SHALL BE COMPUTED IN ACCORDANCE WITH AISI " SPECIFICATION FOR DESIGN OF COLD FORMED STEEL STRUCTURAL MEEMBERS (AISI)".

5 EXTERIOR METAL STUDS SHALL BE SPACED PER NOTE 1 ABOVE. AT EXTERIOR WALLS PROVIDE (1) ROW OF LATERAL BRACING AT PANEL EDGES. ELSE WHERE PROVIDE HORIZONTAL BRIDGING PER MANUFACTURER'S RECOMMENDATIONS. STUD TRACKS SHALL BE EQUAL 14ga. TRACK SPLICE SHALL BE WELDED PER DETAIL PROVIDED

6 PROVIDE WALL BRACING & CONNECTION DETAILS AS RECOMMENDED BY THE STUD MANFACTURER IN COORDINATION WITH DETAILS HEREIN.

7 PROVIDE MANUFACTURER'S STANDARD STEEL RUNNERS, BLOCKING,LINTELS, CLIP ANGLES, BRACING, REINFORCEMENTS, FASTENERS AND ACCESSORIES AS RECOMMENDED BY MANUFACTURER AND/OR SHOWN ON DRAWINGS FOR APPLICATIONS INDICATED, AS NEEDED TO PROVIDE A COMPLETE STEEL FRAMING SYSTEM.

8 WELDING SHALL BE IN ACCORDANCE WITH AWS D1.3 USING E70XX ELECTRODES. ALL WELDS SHALL BE TOUCHED UP WITH A ZINC-RICH PROTECTIVE PAINT FOR CORROSION RESISTANCE.

9 ALL STUDS SHALL BE FULL LENGTH. NO SPLICING PERMITTED UNLESS SPECIFICALLY DETAILED.

10 ALL METAL TO METAL CONNECTIONS TO BE WELD OR SCREW ATTACHMENTS AS SHOWN ON DRAWINGS OR AS REQUIRED BY MANUFACTURER.

11 SCREWS: SELF DRILLING AND SELF TAPPING, CADMIUM PLATED FOR ALL EXTERIOR USES.

12 WIRE TIED CONNECTIONS, POP RIVETS AND CRIMPING ARE NOT PERMITTED.

13 DEFLECTION CRITERIA

A EXTERIOR WALLS:L/600 FOR BRITTLE FINISHES (C&C WIND LOADS MIN.)

14 MATERIAL DESCRIPTIONS

A LIGHT GAGE STEEL SECTIONS

C-STUDS 3 5/8"x1 5/8"x14 GA. Fy=50 KSI Fu=65 KSI Ix=1.069 IN^4 Sx=0.584 IN^3

TRACK 3 5/8"x1 1/4"x14 GA. Fy=50 KSI Fu=65 KSI Ix=2.88 IN^4 Sx=0.427 IN^3

B TYPICAL FASTENERS FOR LIGHT GAGE C-STUDS, TRACKS AND FLAT STRAP BRACING: #12-14 SELF-DRILLING, SELF- TAPPING SHEET METAL SCREWS.

C TYPICAL FASTENERS FOR LIGHT GAGE C-STUDS AND TRACKS TO STRUCTURAL BUILDING ELEMENT: PER DETAILS ON SHEET S530

D OTHER LIGHT GAUGE SECTIONS PER MANUFACTURER.

15 ALL LIGHT GAUGE WORK TO BE DESIGNED BY DELEGATED STRUCTURAL ENGINEER REGISTERED IN THE STATE OF THE PROJECT & HIRED BY THE G.C. LIGHT GAUGE TRUSS SHOP DWGS SUBMITTAL SHALL INCLUDE DETAILS, CALCULATIONS, SPACING & CONNECTIONS & SHALL BE SIGNED & SEALED BY THE DELEGATED ENGINEER. (ANY SIZES & DETAILS SHOWN HEREIN ARE MEANT TO BE MIN. DESIGN ACCEPTABLE BY ENGINEER OF RECORD).

FORMWORK

1 FORMWORK REMOVAL IS THE SOLE RESPONSIBILITY OF THE CONTRACTOR. REMOVE FORMS IN SUCH A MANNER AS TO INSURE JOB SAFETY AND TO PREVENT DAMAGE TO, AND CREEP DEFLECTION OF, THE STRUCTURE. MINIMUM GUIDELINES FOR THE REMOVAL OF SLAB FORMWORK ARE AS FOLLOWS:

A. FORMS FOR SPANS 5 FT. OR LESS MAY BE REMOVED 24 HOURS AFTER COMPLETING THE CONCRETE POUR PROVIDED THE AIR TEMPERATURE DOES NOT FALL BELOW 60 DEGREES F AND THAT NORMAL SET IS ACHIEVED. RESHORING IS NOT REQUIRED.

B. FORMS FOR SPANS 10 FT. OR LESS MAY BE REMOVED 72 HOURS AFTER COMPLETING THE CONCRETE POUR PROVIDED THE CONCRETE STRENGTH REACHES 2100 PSI. RESHORING IS NOT REQUIRED.

C. FORMS FOR SPANS EXCEEDING 10 FT. MAY BE REMOVED 72 HOURS AFTER COMPLETING THE CONCRETE POUR PROVIDED CONCRETE STRENGTH REACHES 2250 PSI.

CHEMICAL ADHESIVE FOR ANCHORING REINFORCING BARS, THREADED BARS AND ANCHOR BOLTS

1 USE AN EPOXY, ACRYLIC OR POLYESTER RESIN ADHESIVE SYSTEM SUCH AS THE HILTI RE 500, ITW RAMSET/RED HEAD EPCON A7 OR C6 INJECTION SYSTEM, POWERS RAWL POWER-FAST SYSTEM, SIMPSON STRONG-TIE AT OR DETAILED FASTENER ALLIED GOLD A-1000, OR ACCEPTED EQUIVALENT. FOLLOW MANUFACTURER'S SPECIFICATIONS FOR USE AND INSTALLATION.

2 CONFIRM THE ABSENCE OF REINFORCING STEEL BY DRILLING A 1/4" DIAMETER PILOT HOLE FOR EACH ANCHOR. DO NOT CUT REINFORCING STEEL WITHOUT APPROVAL OF THE STRUCTURAL ENGINEER.

3 THREADED RODS ARE A-36 GALVANIZED STEEL, UNO.

4 PROVIDE ANCHOR EMBEDMENT, SPACING AND EDGE DISTANCE AS SHOWN ON THE DRAWINGS.

5 REFER TO MANUFACTURER'S INSTALLATION INSTRUCTIONS FOR APPROPRIATE DRILL SIZE. THOROUGHLY CLEAN HOLE INCLUDING REMOVAL OF DUST PRIOR TO FILLING WITH EPOXY. SEE NOTE BELOW.

NOTE:
BLOW OUT HOLES WITH COMPRESSED AIR AND USE NYLON BRUSH PER MANUFACTURER'S RECOMMENDATIONS TO REMOVE COMPLETELY ALL DUST & CHIPS BEFORE APPLYING EPOXY. ALL EPOXY WORK MUST BE INSPECTED FOR VERIFICATION.

MISCELLANEOUS

1 CONCRETE PADS FOR MECHANICAL AND ELECTRICAL EQUIPMENT ON FLOORS SHALL BE NO LESS THAN 3 1/2" HIGH UNLESS OTHERWISE NOTED AND REINFORCED WITH #3 BARS ON 12" O.C. EACH WAY, 1 1/2" FROM TOP OF SLAB. WHEN THE PAD EXCEEDS 10" IN THICKNESS, REINFORCE WITH #3 BARS ON 12" O.C. EACH WAY, TOP AND BOTTOM. ANCHOR PAD TO SLAB WITH #4 DOWELS AT 24" O.C. EACH WAY, CAST OR CHEMICALLY ADHERED INTO SUPPORTING SLAB.

2 CONTRACTOR SHALL SUPPLY ALL ITEMS FOR ATTACHING MECHANICAL AND ELECTRICAL EQUIPMENT TO THE BUILDING STRUCTURE TO RESIST ALL LOADS INCLUDING WIND FORCES. ATTACHMENT SHALL BE MADE SO AS NOT TO OVERSTRESS STRUCTURAL MEMBERS. COORDINATE THE ATTACHMENTS AND LOCATIONS OF THE EQUIPMENT WITH THE STRUCTURAL SHOP DRAWINGS. REFER TO THE MECHANICAL AND ELECTRICAL DRAWINGS FOR ADDITIONAL REQUIREMENTS.

3 SUBSTITUTION OF EXPANSION ANCHORS FOR ADHESIVE ANCHORS OR EMBEDDED ANCHORS SHOWN ON THE DRAWINGS WILL NOT BE PERMITTED UNLESS APPROVED BY THE ENGINEER OF RECORD IN ADVANCE.

4 THE CONTRACTOR SHALL PROVIDE THE FOLLOWING ADDITIONAL SERVICES:

A VERIFICATION OF ALL DIMENSIONS, ELEVATIONS, OPENING SIZES, MECHANICAL EQUIPMENT WEIGHTS PRIOR TO STARTING WORK.

B REMOVE ALL ABANDONED FOUNDATIONS, UTILITIES, PIPELINES, ETC. THAT INTERFERE WITH NEW CONSTRUCTION.

C REVIEW AND APPROVE ALL SHOP DRAWINGS PRIOR TO SUBMITTAL, NOTING CHANGES MADE WHICH DO NOT COMPLY WITH DESIGN DRAWINGS.

D PROVIDE TEMPORARY BRACING AND SHORING TO PREVENT EXCESSIVE DEFLECTIONS AND DAMAGE DURING CONSTRUCTION. DESIGN OF TEMPORARY BRACING AND SHORING SHALL BE THE RESPONSIBILITY OF THE CONTRACTOR.

E SUPPORT OF CEILING SYSTEMS, TOILET PARTITIONS, COUNTERS, MISCELLANEOUS EQUIPMENT, AND WINDOW SYSTEMS AS DEFINED IN THE ARCHITECTURAL PLANS.

REQUIRED STRUCTURAL INSPECTIONS

1 INSPECTIONS INSPECTIONS BY THE D-B'S QC STAFF.

A. FOUNDATION INSPECTION AFTER EXCAVATION AND SOIL PREPARATION, BUT PRIOR TO PLACING REINFORCING. AGAIN, AFTER REINFORCING PLACEMENT AND PRIOR TO CONCRETE PLACEMENT.

B. CONCRETE SLAB ON GRADE/UNDERFLOOR INSPECTION SHALL BE MADE AFTER ALL UNDERFLOOR EQUIPMENT IS IN PLACE, BUT PRIOR TO CONCRETE PLACEMENT OR OTHER FLOORING PLACEMENT.

C. FRAMING INSPECTION SHALL BE MADE AFTER ALL ROUGH MECHANICAL, ELECTRICAL, AND PLUMBING EQUIPMENT IS IN PLACE, BUT PRIOR TO FIREPROOFING OR WALL COVERING IS INSTALLED.

D. FINAL INSPECTION SHALL BE MADE WHEN THE CONTRACTOR HAS COMPLETED THE BUILDING AND IT IS READY FOR OCCUPANCY.

2 IN ACCORDANCE WITH THE REQUIREMENTS OF THE BUILDING CODE, THE OWNER AND/OR DESIGN BUILD CONTRACTOR WILL PROVIDE QUALIFIED PERSONNEL TO PERFORM THE FOLLOWING SPECIAL INSPECTIONS AND REPORT THE FINDINGS TO THE ENGINEER. THIS DOES NOT RELIEVE THE CONTRACTOR OF ANY RESPONSIBILITY TO PERFORM THE WORK IN ACCORDANCE WITH THE DESIGN DRAWINGS. THE CONTRACTOR SHALL NOTIFY THE INSPECTOR 72 HOURS IN ADVANCE OF ALL INSPECTIONS.

A. EXCAVATIONS, GRADING AND EARTH FILL SHALL BE INSPECTED IN ACCORDANCE WITH THE CODE AND CONTRACT DOCUMENTS.

B. FOUNDATION INSPECTION DURING THE PLACEMENT OF FOOTINGS AND SLABS ON GRADE. ALL EMBEDDED BOLTS SHALL BE INSPECTED.

C. FRAMING INSPECTIONS DURING THE ERECTION OF ALL STEEL FRAMING MEMBERS. INSPECTIONS OF ALL DECKING PLACEMENT AND ATTACHMENTS.

D. DUCTILE-MOMENT RESISTING STEEL FRAMES SHALL HAVE WELDS INSPECTED IN ACCORDANCE WITH THE CODE AND CONTRACT DOCUMENTS.

E. HIGH-STRENGTH BOLTS SHALL BE INSPECTED DURING INSTALLATION AND TIGHTENED IN ACCORDANCE WITH THE CODE AND CONTRACT DOCUMENTS.

F. ALL REINFORCING STEEL SHALL BE INSPECTED PRIOR TO CONCRETE PLACEMENT.

G. ALL EPOXY CONNECTION HOLES SHALL BE INSPECTED TO BE DUST FREE.

H. ALL WELDS TO BE INSPECTED BY A CERTIFIED WELDING INSPECTOR.

3 NO CHANGES IN CONSTRUCTION FROM THAT SHOWN IN THE SHOP DRAWINGS REVIEWED BY THE A/E SHALL BE MADE WITHOUT THE SPECIFIC WRITTEN APPROVAL OF THE ENGINEER OF RECORD.

4 SUBMITTALS SHALL CONFORM TO REQUIREMENTS OF CONTRACT DOCUMENTS, AND SHALL BE CHECKED AND MARKED "APPROVED" BY CONTRACTOR PRIOR TO SUBMITTAL. NON-CONFORMING SUBMITTALS WILL BE RETURNED WITHOUT REVIEW.

5 SHOP DRAWINGS SHALL NOT BE REPRINTS OF CONTRACT DOCUMENTS & WILL BE BASIS FOR RETURNING THEM WITHOUT REVIEW.

GENERAL WORKMANSHIP NOTES

1 BRACE ALL CONSTRUCTION AGAINST GRAVITY AND WIND LOADS UNTIL STRUCTURE IS COMPLETE.

2 STRUCTURAL CONTRACTORS TO COORDINATE WITH ALL OTHER TRADES.

1 FORMWORK REMOVAL IS THE SOLE RESPONSIBILITY OF THE CONTRACTOR. REMOVE FORMS IN SUCH A MANNER AS TO INSURE JOB SAFETY AND TO PREVENT DAMAGE TO, AND CREEP DEFLECTION OF, THE STRUCTURE. MINIMUM GUIDELINES FOR THE REMOVAL OF SLAB FORMWORK ARE AS FOLLOWS:

A. FORMS FOR SPANS 5 FT. OR LESS MAY BE REMOVED 24 HOURS AFTER COMPLETING THE CONCRETE POUR PROVIDED THE AIR TEMPERATURE DOES NOT FALL BELOW 60 DEGREES F AND THAT NORMAL SET IS ACHIEVED. RESHORING IS NOT REQUIRED.

B. FORMS FOR SPANS 10 FT. OR LESS MAY BE REMOVED 72 HOURS AFTER COMPLETING THE CONCRETE POUR PROVIDED THE CONCRETE STRENGTH REACHES 2100 PSI. RESHORING IS NOT REQUIRED.

C. FORMS FOR SPANS EXCEEDING 10 FT. MAY BE REMOVED 72 HOURS AFTER COMPLETING THE CONCRETE POUR PROVIDED CONCRETE STRENGTH REACHES 2250 PSI.

RECEIVED
SEP 06 2012
NWFWMD

NUMBER	REVISIONS	DATE	APPROVED BY

MARLER PARK BOAT RAMP AND OUTDOOR EXHIBIT AREA

ATKINS
2114 Airport Blvd., Suite 1450 Pensacola, Florida 32504
Phone No. 850.478.9844

Issue Date

SCALE:	
DRAWN BY:	Author
DESIGNED BY:	Designer
CHECKED BY:	Checker
APPROVED BY:	Approver
PROJECT NUMBER	100024290
DRAWING NUMBER	S001

DRAWING LIST	
SHEET NUMBER	SHEET NAME
S000	ISOMETRIC VIEW
S001	GENERAL NOTES
S002	STR. ABBREVIATIONS & WIND DIAGRAM
S100	OVERALL FOUNDATION PLAN
S101	ELECTRICAL BUILDING PLANS
S200	SECTIONS & DETAILS
S201	TYPICAL MASONRY DETAILS
S202	LIGHT GAUGE TRUSS DETAILS

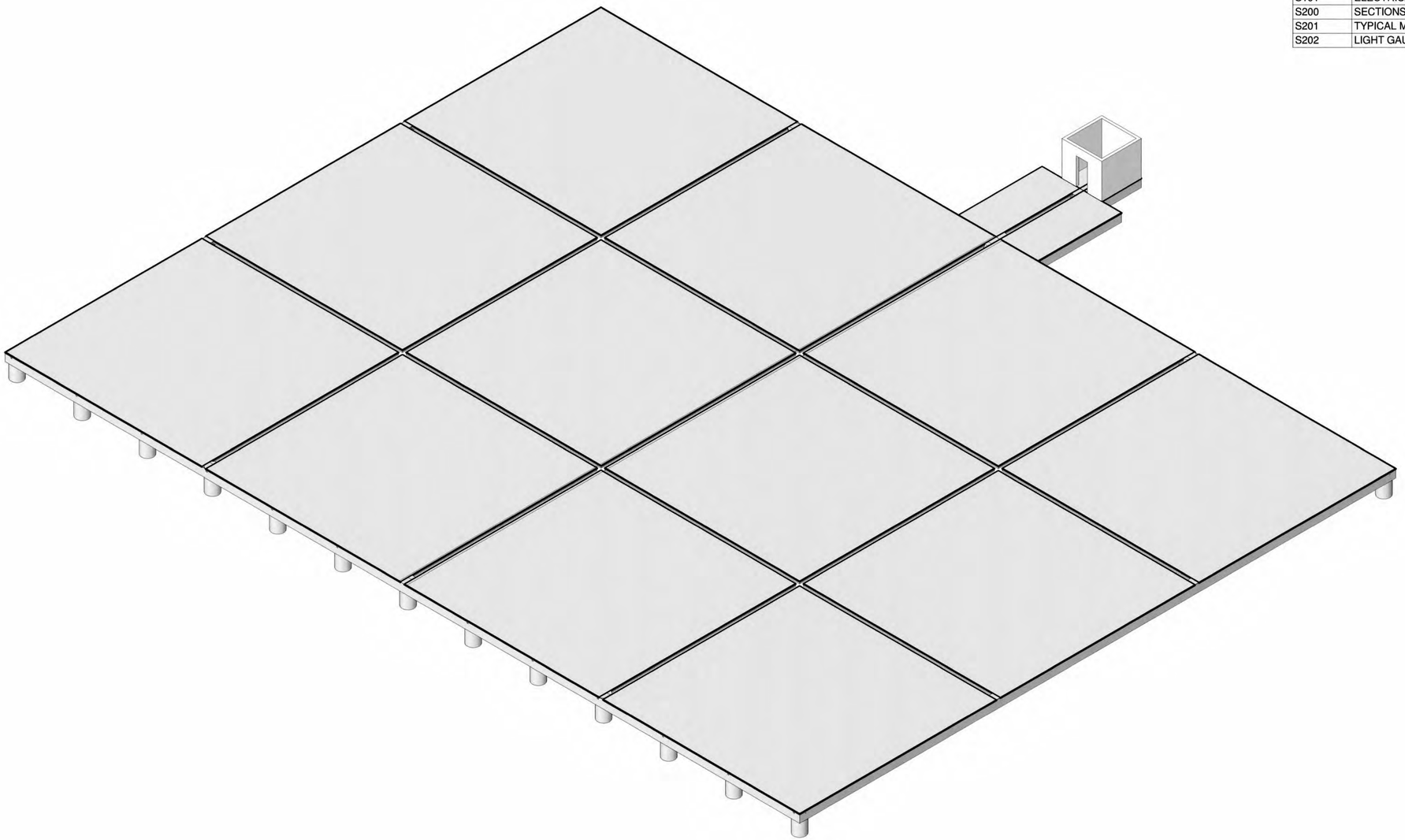

1 **ISOMETRIC VIEW**
SCALE:

RECEIVED
SEP 06 2012
NWFWMD

NUMBER	REVISIONS	DATE	APPROVED BY

MARLER PARK BOAT RAMP
AND OUTDOOR EXHIBIT
AREA

ATKINS
2114 Airport Blvd., Suite 1450 Pensacola, Florida 32504
Phone No. 850.478.9844

ENGINEER OF RECORD
KEVIN M. MORGAN
LICENSE No. 71350
STATE OF FLORIDA
PROFESSIONAL ENGINEER

Issue Date

SCALE:	
DRAWN BY:	Author
DESIGNED BY:	Designer
CHECKED BY:	Checker
APPROVED BY:	Approver
PROJECT NUMBER	100024290
DRAWING NUMBER	S000

STRUCTURAL ABBREVIATIONS & SYMBOLS

ABBREV.	ABBREVIATION
ADD.	ADDITIVE
ADD'L	ADDITIONAL
ALT.	ALTERNATE/ALTERNATIVE
ALUM. OR AL	ALUMINUM
A.C.I.	AMERICAN CONCRETE INSTITUTE
A/E	ARCHITECT/ENGINEER
A.F.F.	ABOVE FINISH FLOOR
A.I.S.C.	AMERICAN INSTITUTE OF STEEL CONSTRUCTION
A.I.S.I.	AMERICAN IRON AND STEEL INSTITUTE
A.S.T.M.	AMERICAN SOCIETY OF TESTING MATERIALS
A.W.S.	AMERICAN WELDING SOCIETY
A.B.	ANCHOR BOLTS
ARCH.	ARCHITECTURE/ARCHITECTURAL
ASPH.	ASPHALT
B.F.F.	BELOW FINISH FLOOR
B.P.	BASE PLATE/BEARING PLATE
BM.	BEAM
BRG.	BEARING
B.M.	BENCH MARK
BIT.	BITUMINOUS, BITUMASTIC
BLK.	BLOCK
B/	BOTTOM OF
BLDG.	BUILDING
B.U.	BUILT-UP
BTWN	BETWEEN
BOT	BOTTOM
CIP	CAST IN PLACE
C.I.	CAST-IRON
C.S.	CAST-STEEL
CTR	CENTER
CTRD	CENTERED
CL.	CENTER LINE
C	CHANNEL
CLR.	CLEAR/CLEARANCE
COL.	COLUMN
CO.	COMPANY
CONC.	CONCRETE
C.B.	CONCRETE BEAM
CC	CONCRETE COLUMN
C.M.	CONCRETE MASONRY
CMU	CONCRETE MASONRY UNIT
COORD.	COORDINATE
CONT.	CONTINUOUS
CONN.	CONNECTION
CONST.	CONSTRUCTION
CS.J.	CONSTRUCTION JOINT
C.J.	CONTROL JOINT
CMP.	CORRUGATED METAL PIPE
C.F.	CUBIC FEET (FOOT)
C.Y.	CUBIC YARD
DBA	DEFORMEDABLE BAR ANCHOR(WELDABLE REBARS)
DEPT.	DEPARTMENT
DIA.	DIAMETER
DIM.	DIMENSION
DIST.	DISTANCE
DN.	DOWN
DR.	DRAIN
DWG.	DRAWING
DIAG	DIAGONAL
DET	DETAIL
EA.	EACH
E.E.	EACH END
E.F.	EACH FACE
E.S.	EACH SIDE
E.W.	EACH WAY
ELEC.	ELECTRIC/ELECTRICAL
EL., ELEV.	ELEVATION, ELEVATOR
ENGR.	ENGINEER
EQ. SP.	EQUAL SPACED
EXIST.	EXISTING
EXP.	EXPANSION
EXT.	EXTERIOR
F.S.	FAR SIDE
FT.	FEET/FOOT
FDN.	FOUNDATION
FIN.	FINISH
FIN. GR.	FINISH GRADE
F.F. FLR.	FINISHED FLOOR
F.D.	FLOOR DRAIN
FTG.	FOOTING
F.O.W.	EXTERIOR FACE OF WALL (REVEAL SIDE)
F.P.	FULL PENETRATION WELD
GA.	GAGE/GAUGE
GALV.	GALVANIZED
G.C.	GENERAL CONTRACTOR
GEN.	GENERAL
G.S.	GALVANIZED STEEL
G.S.N.	GENERAL STRUCTURAL NOTES
G.L.	GRID LINE
HCS	HOLLOW CORE SLAB
HORIZ.	HORIZONTAL
HSA	HEADED STUD ANCHOR
HT.	HEIGHT
H.S.B.	HIGH STRENGTH BOLT (A-325)
IN.	INCH
I.D.	INSIDE DIAMETER
INT.	INTERIOR
INV.	INVERT
I.F.	INSIDE FACE
JT.	JOINT
JST.	JOIST
K.	KIP
KWY.	KEYWAY
LDG.	LANDING
LGTH.	LENGTH
LT. WT.	LIGHT WEIGHT
LG. L	LONG ANGLE
LLH	LONG LEG HORIZONTAL
LLV	LONG LEG VERTICAL
MID.	MIDDLE
MFR.	MANUFACTURE/MANUFACTURER
M.B.	MASONRY BEAM, MACHINE BOLT
M.O.	MASONRY OPENING
MATL.	MATERIAL
MAX.	MAXIMUM
MECH.	MECHANICAL
M/E/P	MECHANICAL,ELECTRICAL,PLUMBING
MIN.	MINIMUM
MISC.	MISCELLANEOUS
MPH.	MILES PER HOUR
MET.	METAL
N.S.	NEAR SIDE
N.I.C.	NOT IN CONTRACT
N.T.S.	NOT TO SCALE
NO.	NUMBER
O.C.	ON CENTERS
OPNG.	OPENING
O.F.	OUTSIDE FACE
O.D.	OUTSIDE DIAMETER
PAF.	POWDER ACTIVATED FASTENERS
PAR.	PARALLEL
PEN	PENETRATION
PCF	POUNDS PER CUBIC FEET
P.J.F.	PREMOLDED BITUMINOUS JOINT FILLER
PL.	PLATE
PLY.	PLYWOOD
PLF.	POUNDS PER LINEAR FOOT
P.S.F.	POUNDS PER SQUARE FOOT
P.S.I.	POUNDS PER SQUARE INCH
P.C.	PRECAST CONCRETE
P.C.I.	PRECAST CONCRETE INSTITUTE
P.C.L.	PRECAST/PRESTRESSED CONCRETE LINTEL
PREFAB.	PREFABRICATED
P.T.	PRESSURE TREATED
REF.	REFERENCE
REINF.	REINFORCING
R.C.P.	REINFORCED CONCRETE PIPE
REQD.	REQUIRED
R.W.	RETAINING WALL
R.D.	ROOF DRAIN
SBP	SOIL BEARING PLATE
SCHED.	SCHEDULE
SJI	STEEL JOIST INSTITUTE
SPC.	SPACE/SPACES
SPECS.	SPECIFICATIONS
SQ.	SQUARE
S.S.	STAINLESS STEEL
STD.	STANDARD
STL.	STEEL
SYM.	SYMMETRICAL
SYP	SOUTHERN YELLOW PINE WOOD
STRUCT	STRUCTURAL
SPCG	SPACING
SIM	SIMILAR
STIFF	STIFFENER
TEMP.	TEMPERATURE
TENS.	TENSION
THK.	THICK
THD.	THREAD/THREADED
T.B.	TIE BEAM
TOL.	TOLERANCE
T&B	TOP AND BOTTOM
T/	TOP OF
TDS.	TURN DOWN SLAB
TYP.	TYPICAL
TS	TUBE STEEL/THICKENED SLAB
U.N.O.	UNLESS NOTED OTHERWISE (ALSO U.O.N.)
VERT.	VERTICAL
V.W.P.	VERIFY WITH PROCESS
VOL.	VOLUME
WF.	WALL FOOTING
WP.	WATERPROOF
W.S.	WELDED STUD
W.W.F.	WELDED WIRE FABRIC
W.H.	WEEP HOLE
WT.	WEIGHT, STRUCTURAL TEE SECTION
W	WIDE FLANGE SECTION
W/	WITH
W/O	WITHOUT
WD.	WOOD
W.P.	WORKING POINT
@	AT
#	POUNDS
K	1000 POUNDS (KIP)
+\-	PLUS OR MINUS
W	WIDE FLANGE
C	CHANNEL
L	ANGLE
℄	CENTER LINE
℘	PROPERTY LINE, PLATE
Ø	DIAMETER
&	AND
Sp	SECTION MODULES
Ip	MOMENT OF INERTIA

NOTE:
ABBREVIATIONS MAY BE SHOWN WITH OR WITHOUT PERIODS (I.E., AWS OR A.W.S.)

RECEIVED
SEP 06 2012
NWFWMD

NUMBER	REVISIONS	DATE	APPROVED BY

MARLER PARK BOAT RAMP
AND OUTDOOR EXHIBIT
AREA

ATKINS
2114 Airport Blvd., Suite 1450 Pensacola, Florida 32504
Phone No. 850.478.9844

Issue Date

SCALE:	
DRAWN BY:	Author
DESIGNED BY:	Designer
CHECKED BY:	Checker
APPROVED BY:	Approver
PROJECT NUMBER	100024290
DRAWING NUMBER	S002

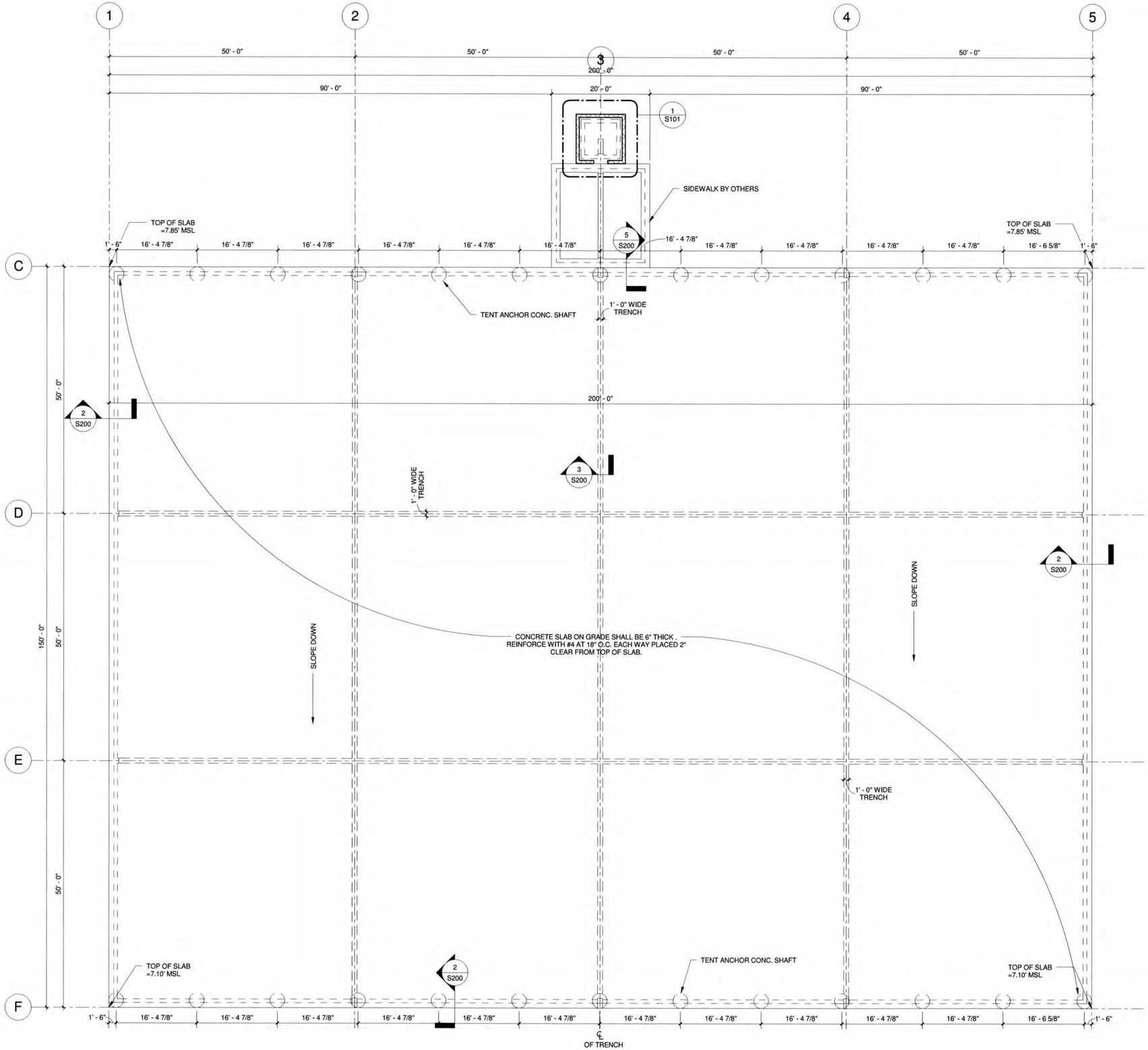

RECEIVED
SEP 06 2012
NWFWMD

NUMBER	REVISIONS	DATE	APPROVED BY

MARLER PARK BOAT RAMP
AND OUTDOOR EXHIBIT
AREA

ATKINS
2114 Airport Blvd., Suite 1450 Pensacola, Florida 32504
Phone No. 850.478.9844

ENGINEER OF RECORD
MICHAEL A. MORGAN
LICENSED
No. 71350
STATE OF FLORIDA
PROFESSIONAL ENGINEER

Issue Date

SCALE:	3/32" = 1'-0"
DRAWN BY:	Author
DESIGNED BY:	Designer
CHECKED BY:	Checker
APPROVED BY:	Approver
PROJECT NUMBER	100024290
DRAWING NUMBER	S100

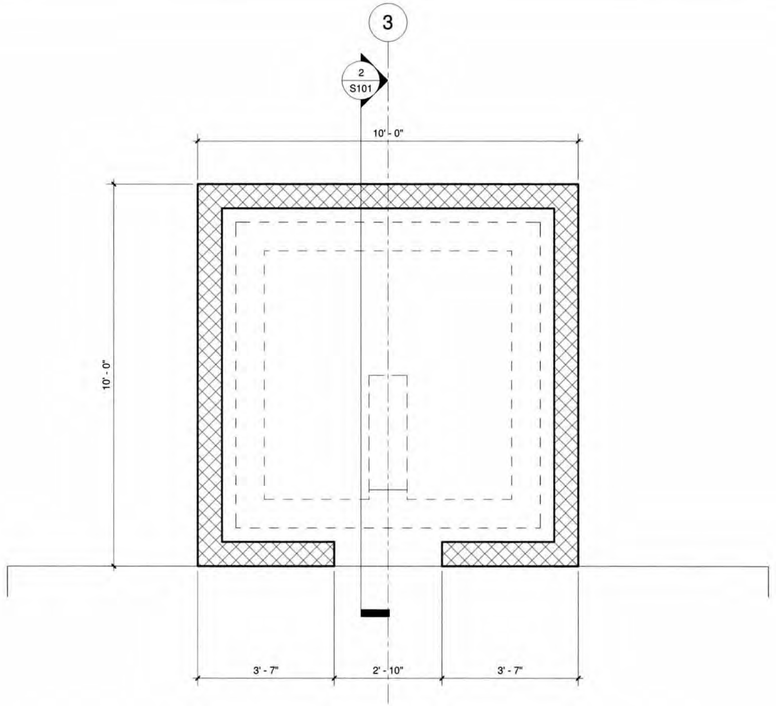

1 ELECTRICAL BLDG. FOUNDATION PLAN

SCALE: 1/2" = 1'-0"

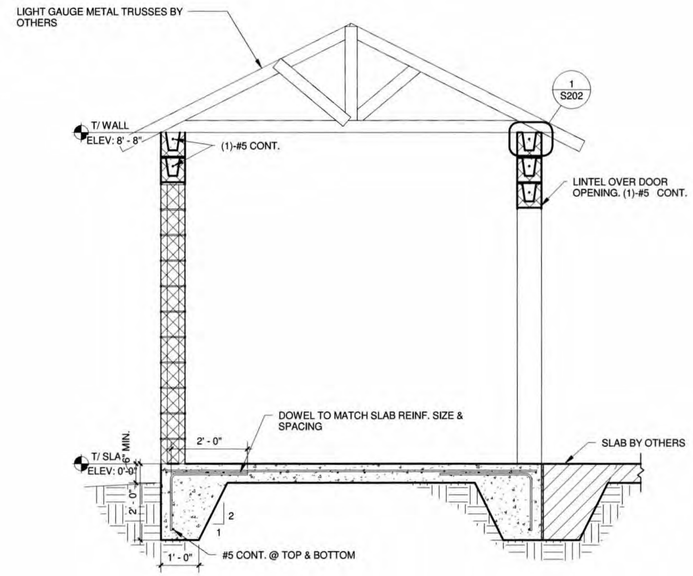

2 SECTION THRU ELEC. BLDG.

SCALE: 1/2" = 1'-0"

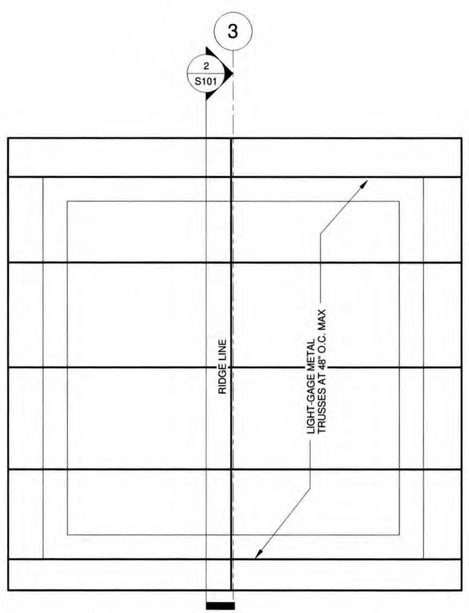

3 ROOF FRAMING PLAN

SCALE: 1/2" = 1'-0"

RECEIVED
SEP 06 2012
NWFWMD

NUMBER	REVISIONS	DATE	APPROVED BY

MARLER PARK BOAT RAMP AND OUTDOOR EXHIBIT AREA

ATKINS
2114 Airport Blvd., Suite 1450 Pensacola, Florida 32504
Phone No. 850.478.9844

ENGINEER OF RECORD
JAMES MORGAN
No. 71468
STATE OF FLORIDA
PROFESSIONAL ENGINEER

Issue Date

SCALE:	1/2" = 1'-0"
DRAWN BY:	Author
DESIGNED BY:	Designer
CHECKED BY:	Checker
APPROVED BY:	Approver
PROJECT NUMBER	100024290
DRAWING NUMBER	S101

TABLE A - REINFORCEMENT TENSION LAPS, EMBEDMENT AND HOOK LENGTHS

fw = 60000psi f'c = 4000psi

BAR SIZE	CLASS "A" LAP		CLASS "B" LAP		HOOKS
	TOP BARS	OTHER BARS	TOP BARS	OTHER BARS	
#3	19	15	24	19	9
#4	25	19	32	25	10
#5	31	24	40	31	12
#6	37	29	48	37	15
#7	54	42	70	54	17
#8	62	62	80	62	19
#9	70	54	90	70	22
#10	77	60	100	77	24
#11	85	66	110	85	26

NOTES FOR USE WITH TABLE A

1. LENGTH SHOWN CONFORM TO NON-SEISMIC PROVISIONS OF ACI 318 FOR UNCOATED BARS ENCLOSED BY PROPERLY SPACED TIES OR STIRRUPS.
2. CLASS "A" LAPS APPLY WHEN BAR LAPS ARE STAGGERED TO LAP HALF THE BARS AT ONE LOCATION OR WHEN BARS ARE LAPPED AT THE LOCATION OF MINIMUM STRESS IN THE BARS.
3. CLASS "B" LAPS APPLY WHEN ALL BARS ARE LAPPED AT A LOCATION OF MAXIMUM STRESS IN THE BARS.
4. TOP BARS SHALL BE DEFINED AS ANY HORIZONTAL BARS PLACED SUCH THAT MORE THAN 12" OF FRESH CONCRETE IS CAST IN THE MEMBER BELOW THE BARS IN ANY SINGLE POUR.
5. LAP AND EMBEDMENT LENGTHS HAVE THE SAME VALUE.
6. CLEAR SPACING OF REINFORCING SHALL NOT BE LESS THAT 1" OR 1 BAR DIAMETER. IF THE CLEAR SPACING IS LESS THAN SPECIFIED, M ULTIPLY THE ABOVE LENGTHS BY 1.5.
7. CLEAR COVER FOR REINFORCING SHALL NOT BE LESS THAN 1 BAR DIAMETER OR AS SPECIFIED IN SECTION 7.7 OF ACI 318. IF THE CLEAR COVER IS LESS THAN SPECIFIED, MULTIPLY THE ABOVE LENGTHS BY 1.5.
8. MULTIPLY THE ABOVE LENGTHS BY 1.3 FOR CONCRETE WITH LIGHTWEIGHT AGGREGATE.
9. MULTIPLY THE ABOVE LENGTHS BY 1.5 FOR EPOXY COATED REINFORCING.
10. FOR CONCRETE STRENGTHS OTHER THAN 4000 PSI, MULTIPLY ABOVE LENGTHS BY 4000 / f'c.
11. UNLESS NOTED OTHERWISE ALL FOOTING REINFCING BARS SHALL LAP AROUND CORNERS.

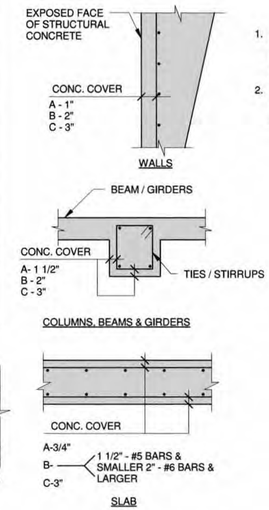

1. LENGTH SHOWN CONFORM TO NON-SEISMIC PROVISIONS OF ACI 318 FOR UNCOATED BARS ENCLOSED BY PROPERLY SPACED TIES OR STIRRUPS
2. CLASS "A" LAPS APPLY WHEN BAR LAPS ARE STAGGERED TO LAP HALF THE BARS AT ONE LOCATION OR WHEN BARS

COVER
A. NO EXPOSURE TO GROUND, WEATHER, OR WATER AFTER FORM REMOVAL.*
B. EXPOSURE TO GROUND, WEATHER OR WATER AFTER FORM REMOVAL.
C. CONCRETE PLACED AGAINST SOIL. *

1 LAP SPLICE SCHEDULE

SCALE: 3/4" = 1'-0"

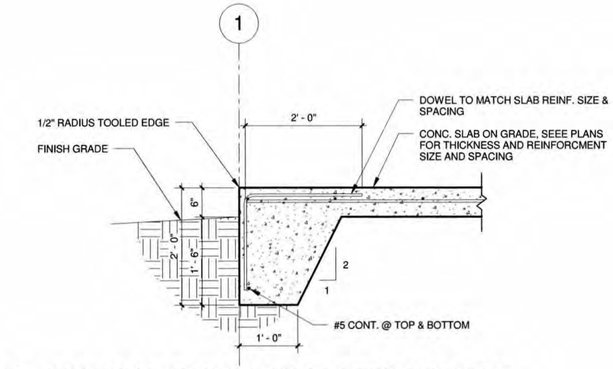

2 TYPICAL THICKENED EDGE DETAIL

SCALE: 3/4" = 1'-0"

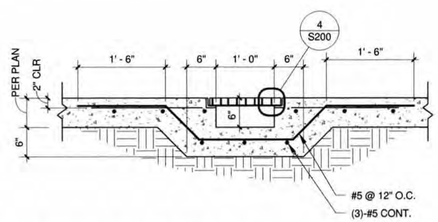

3 TRENCH DETAIL

SCALE: 3/4" = 1'-0"

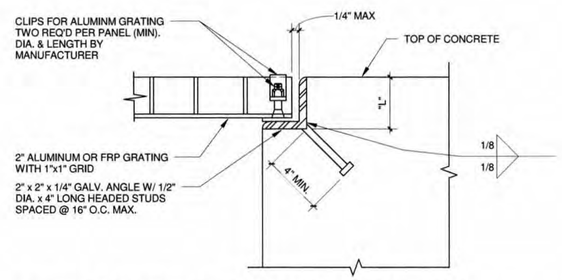

4 GRATE ATTACHMENT DETAIL

SCALE: 3/4" = 1'-0"

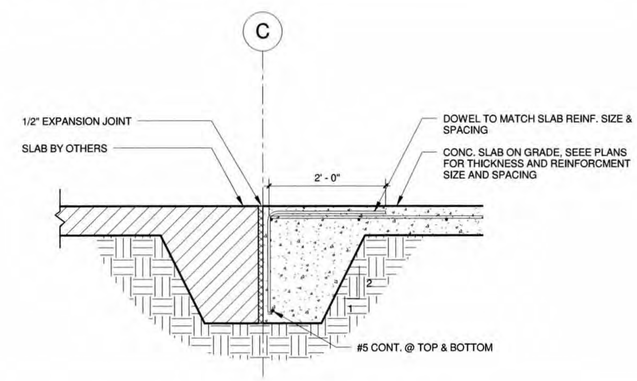

5 SLAB EDGE TO SLAB BY OTHERS DETAIL

SCALE: 3/4" = 1'-0"

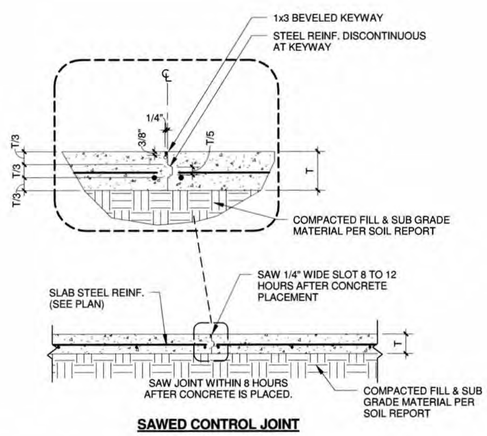

6 SLAB CONTROL JOINT DETAILS

SCALE: 3/4" = 1'-0"

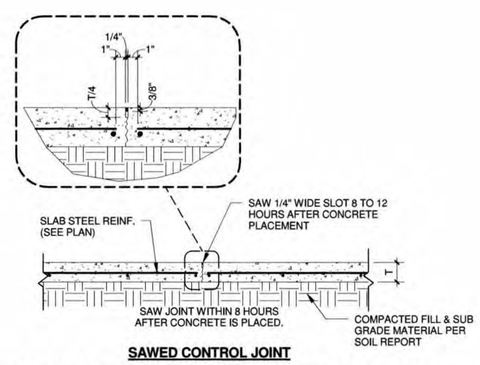

7 SLAB CONTROL JOINT DETAILS

SCALE: 3/4" = 1'-0"

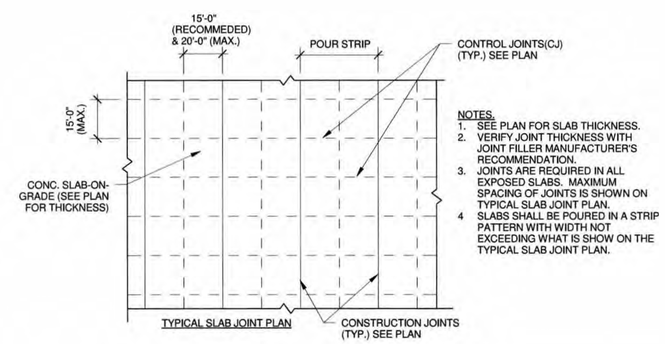

NOTES.
1. SEE PLAN FOR SLAB THICKNESS.
2. VERIFY JOINT THICKNESS WITH JOINT FILLER MANUFACTURER'S RECOMMENDATION.
3. JOINTS ARE REQUIRED IN ALL EXPOSED SLABS. MAXIMUM SPACING OF JOINTS IS SHOWN ON TYPICAL SLAB JOINT PLAN.
4 SLABS SHALL BE POURED IN A STRIP PATTERN WITH WIDTH NOT EXCEEDING WHAT IS SHOW ON THE TYPICAL SLAB JOINT PLAN.

8 SLAB ON GRADE JOINT NOTES

SCALE: 3/4" = 1'-0"

RECEIVED
SEP 06 2012
NWFWMD

NUMBER	REVISIONS	DATE	APPROVED BY

MARLER PARK BOAT RAMP AND OUTDOOR EXHIBIT AREA

ATKINS
2114 Airport Blvd., Suite 1450 Pensacola, Florida 32504
Phone No. 850.478.9844

OWNER OF RECORD
NEIL N. MORGAN LICENSE No. 74350 STATE OF FLORIDA

Issue Date

SCALE:	As indicated
DRAWN BY:	Author
DESIGNED BY:	Designer
CHECKED BY:	Checker
APPROVED BY:	Approver
PROJECT NUMBER	100024290
DRAWING NUMBER	S200

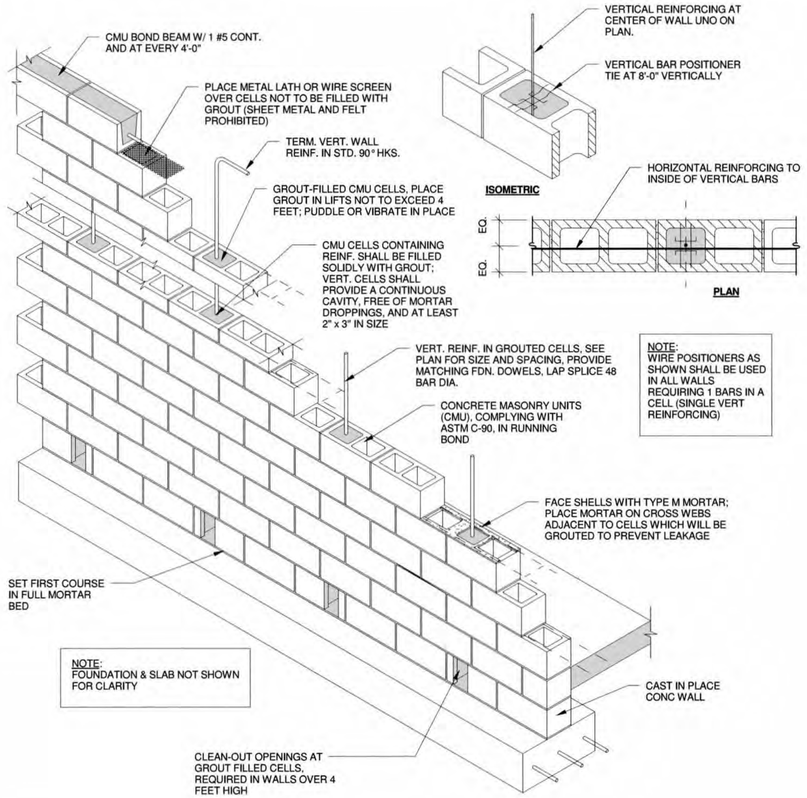

1 TYP.REINF MASONRY WALL CONSTRUCTION

SCALE: 3/4" = 1'-0"

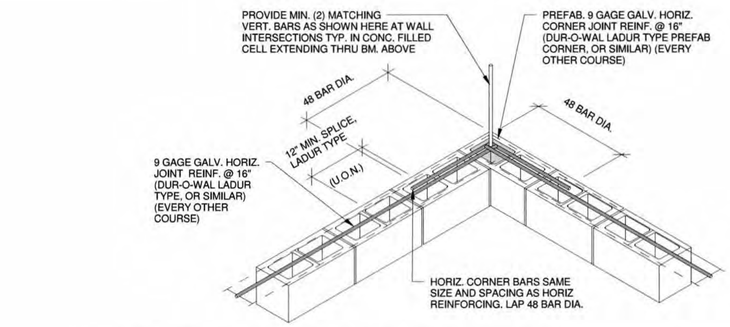

2 TYP. REINF. CORNER DETAIL

SCALE: 3/4" = 1'-0"

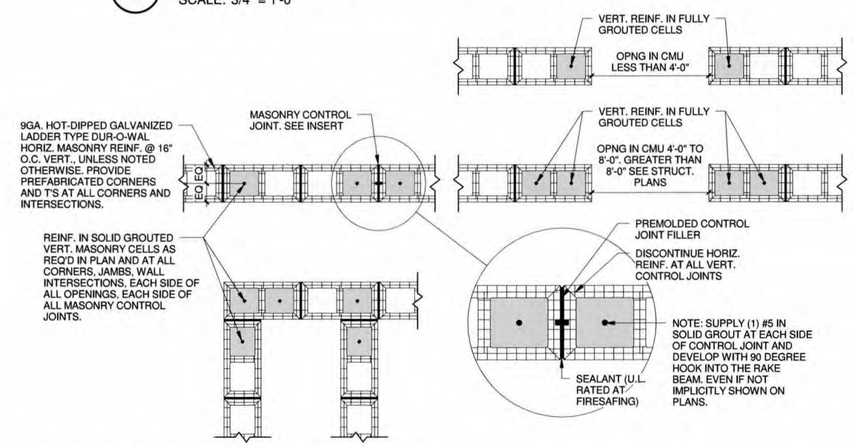

3 REINF. & GROUTING DETAILS

SCALE: 3/4" = 1'-0"

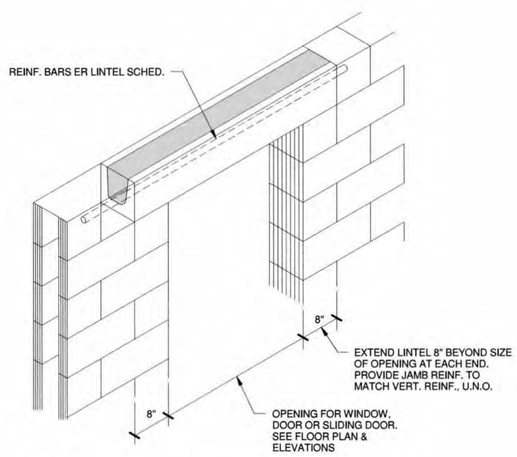

4 PRECAST LINTEL @ OPNG

SCALE: 3/4" = 1'-0"

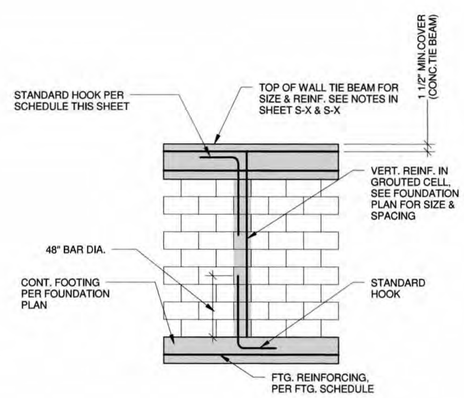

5 TYP. ONE STORY MASONRY WALL

SCALE: 3/4" = 1'-0"

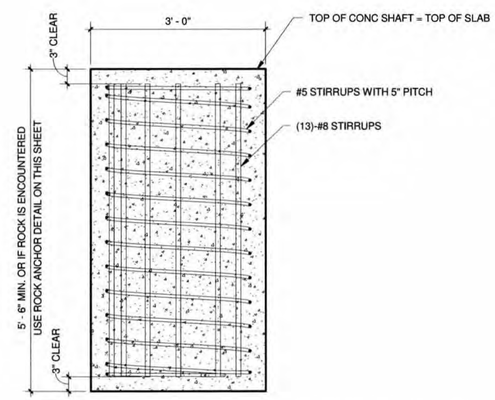

6 TENT ANCHOR CONCRETE SHAFT

SCALE: 3/4" = 1'-0"

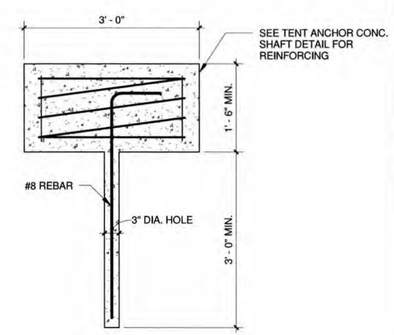

7 ROCK ANCHOR DETAIL

SCALE: 3/4" = 1'-0"

RECEIVED
SEP 06 2012
NWFWMD

NUMBER	REVISIONS	DATE	APPROVED BY

MARLER PARK BOAT RAMP AND OUTDOOR EXHIBIT AREA

ATKINS
2114 Airport Blvd., Suite 1450 Pensacola, Florida 32504
Phone No. 850.478.9844

ENGINEER OF RECORD

Issue Date

SCALE:	3/4" = 1'-0"
DRAWN BY:	Author
DESIGNED BY:	Designer
CHECKED BY:	Checker
APPROVED BY:	Approver
PROJECT NUMBER	100024290
DRAWING NUMBER	S201

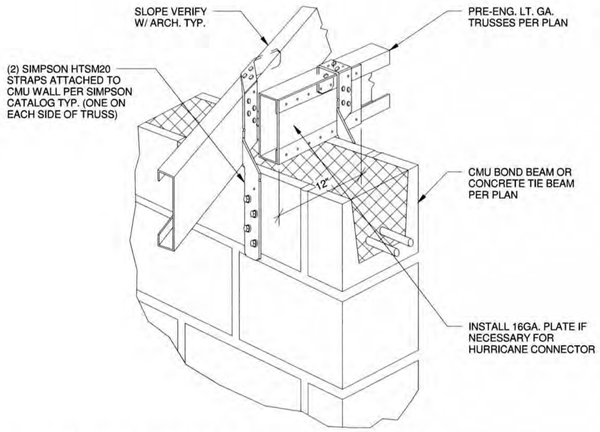

1 LT. GA. TRUSS TO CMU WALL

SCALE: 3/4" = 1'-0"

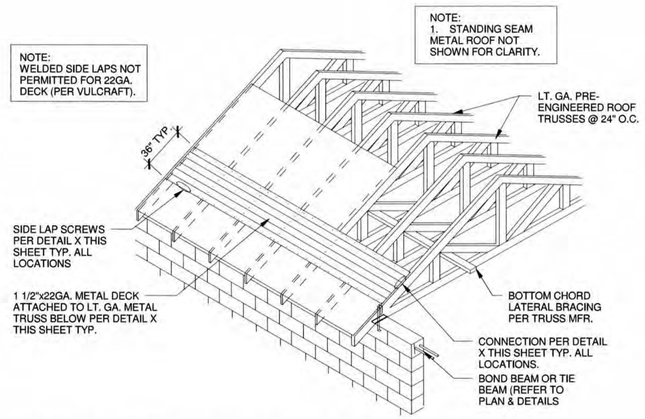

2 METAL DECK TO LT GA TRUSS DETAIL

SCALE: 3/4" = 1'-0"

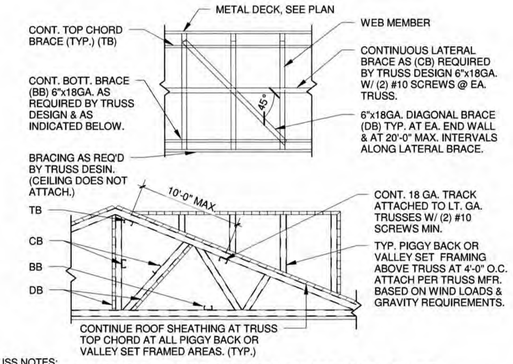

TRUSS NOTES:

1. LT.GA. TRUSS ERECTOR SHALL PROVIDE BRACING ACCORDING TO "COMMENTARY AND RECOMMENDATIONS FOR HANDLING, INSTALLING, AND BRACING METAL PLATE CONNECTED LT. GA. TRUSSES". NOTE THAT THE COMBINED WIND AREA IS GREATER BEFORE THE ROOF SHEETING IS APPLIED, AND BRACING SHALL THEREFORE BE INSTALLED AS THE TRUSSES ARE ERECTED. INADEQUATE BRACING IS THE MOST COMMON CAUSE OF ACCIDENTS IN LT. GA. TRUSS CONSTRUCTION. FULL BUNDLES OF ROOF DECK SHALL NT BE PLACED ON TRUSSES. THIS CONSTRUCTION LOAD SHOULD BE LIMITED TO 4 SHEETS OF ROOF MATERIAL ON ANY PAIR OF TRUSSES AND SHALL BE LOCATED ADJACENT TO THE SUPPORTS. NO EXCESS CONCENTRATION OF ANY CONSTRUCTION MATERIALS (SUCH AS GRAVEL OR SHINGLES) SHALL BE PLACED ON THE TRUSSES IN ANY ONE AREA; THEY SHALL BE SPREAD OUT EVENLY OVER A LARGE AREA SO AS TO AVOID OVERLOADING AND ONE TRUSS.
2. ALL BRACING (DB,TB,BB) SHOWN HEREIN SHALL BE IN ADDITION TO CONTINUOUS LATERAL BRACING SPECIFIED BY THE TRUSS MANUFACTURER. ALL LATERAL BRACING SPECIFIED BY TRUSS MANUFACTURER SHALL HAVE ADDITIONAL DIAGONAL BRACES AT 20'-0" O.C. MAXIMUM.
3. ALL BRACES SHALL BE 6"X18GA. NOMINAL DIMENSION AND SHALL BE ATTACHED WITH (2) #10 SCREWS AT EACH TRUSS INTERSECTION.
4. MINIMUM BRACING SHALL BE 6"X18GA. CONTINUOUS AT TOP AND BOTTOM CHORDS 6'-0" O.C. MAXIMUM. ADD DIAGONAL BRACING AS SHOWN HEREIN.
5. ADDITIONAL BOTTOM CHORD BRACING SHALL BE INSTALLED AS REQUIRED BY TRUSS DESIGN WHEREVER ADEQUATE STRUCTURAL CEILINGS ARE NOT ATTACHED DIRECTLY TO THE BOTTOM CHORD OF THE TRUSS.
6. PROVIDE TRUSS BLOCKING AT ALL TRUSS BEARING SUPPORTS WHERE TRUSS DEPTH EXCEEDS 12". SEE TYPICAL TRUSS BLOCKING DETAILS.

3 TYP. LT. GA. TRUSS BRACING DETAIL

SCALE: 3/4" = 1'-0"

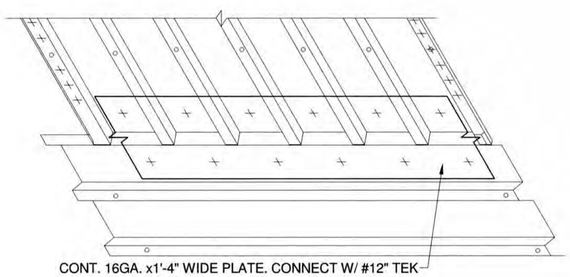

CONT. 16GA. x1'-4" WIDE PLATE. CONNECT W/ #12" TEK SCREWS @ 6" O.C. @ EA. DECK SIDE. BEND PLATE AS NECESSARY @ JUNCTION LINE.

DESIGN CRITERIA

1. STRUCTURAL WORK SHALL BE IN ACCORDANCE WITH UFC-3-310-01, EXCEPT SECTION 3.7 SEISMIC POLICY AS MODIFIED BY INTERNATIONAL BUILDING CODE- 2009, AS ADOPTED AND SUPPLEMENTED BY LOCAL REGULATIONS.
2. VERIFY ALL DIMENSIONS AND SITE CONDITIONS PRIOR TO STARTING CONSTRUCTION. NOTIFY THE A/E OF ANY DISCREPANCIES OR INCONSISTENCIES.
3. DO NOT SCALE DRAWINGS.

4 DECKING AT CHANGE OF DIRECTION

SCALE: 3/4" = 1'-0"

RECEIVED
SEP 06 2012
NWFWMD

NUMBER	REVISIONS	DATE	APPROVED BY

MARLER PARK BOAT RAMP
AND OUTDOOR EXHIBIT
AREA

ATKINS
2114 Airport Blvd., Suite 1450 Pensacola, Florida 32504
Phone No. 850.478.9844

Issue Date

SCALE:	3/4" = 1'-0"
DRAWN BY:	MR
DESIGNED BY:	JAI
CHECKED BY:	JAI
APPROVED BY:	JAI
PROJECT NUMBER	100024290
DRAWING NUMBER	S202

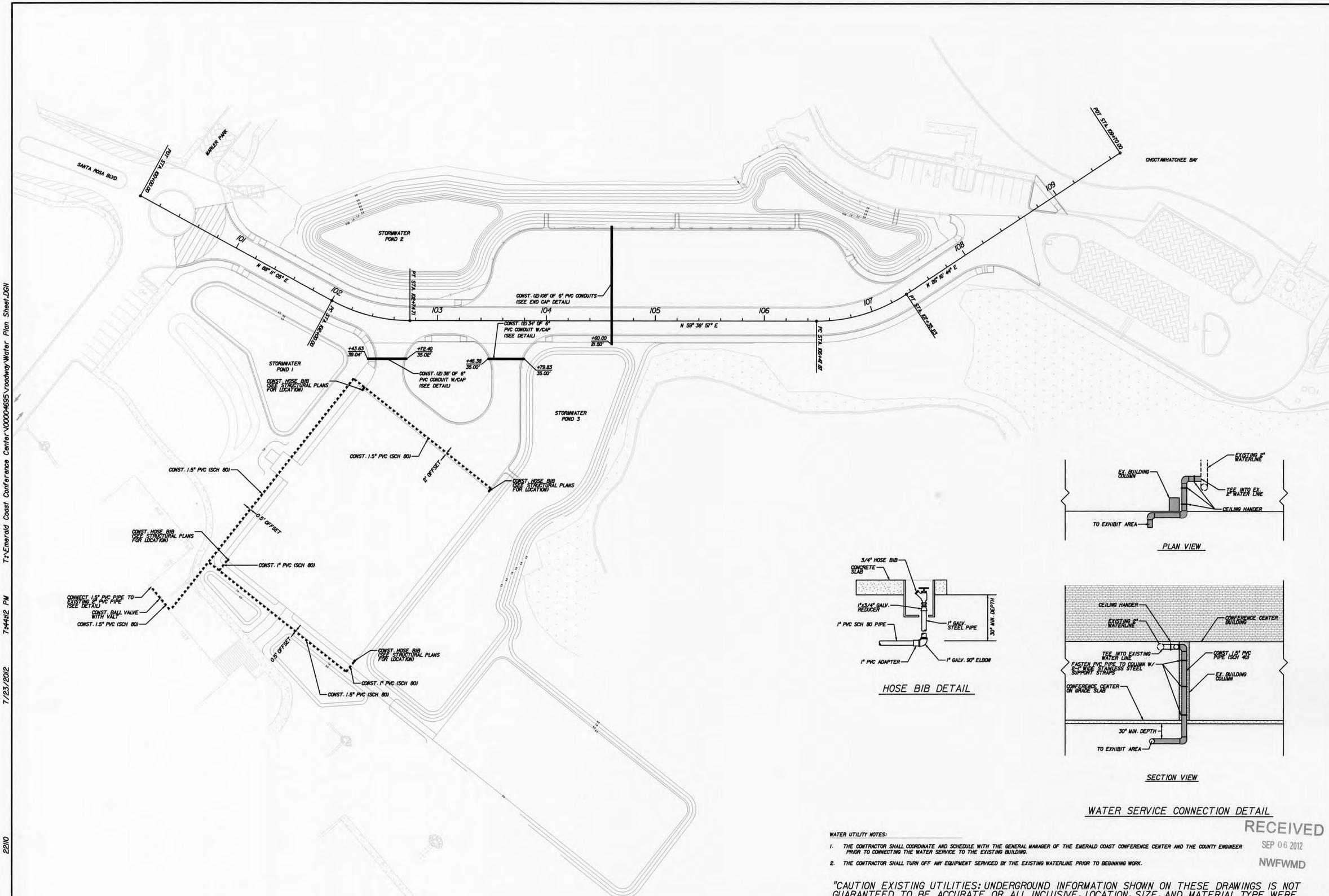

HOSE BIB DETAIL

PLAN VIEW

SECTION VIEW

WATER SERVICE CONNECTION DETAIL

WATER UTILITY NOTES:

1. THE CONTRACTOR SHALL COORDINATE AND SCHEDULE WITH THE GENERAL MANAGER OF THE EMERALD COAST CONFERENCE CENTER AND THE COUNTY ENGINEER PRIOR TO CONNECTING THE WATER SERVICE TO THE EXISTING BUILDING.
2. THE CONTRACTOR SHALL TURN OFF ANY EQUIPMENT SERVICED BY THE EXISTING WATERLINE PRIOR TO BEGINNING WORK.

RECEIVED
SEP 06 2012
NWFWMD

"CAUTION EXISTING UTILITIES: UNDERGROUND INFORMATION SHOWN ON THESE DRAWINGS IS NOT GUARANTEED TO BE ACCURATE OR ALL INCLUSIVE, LOCATION, SIZE, AND MATERIAL TYPE WERE OBTAINED FROM AVAILABLE RECORDS SUPPLIED BY THE RESPECTIVE UTILITY COMPANY. SUNSHINE STATE ONE-CALL OF FLORIDA, INC. 386-575-2009 MUST BE NOTIFIED 48 HOURS PRIOR TO ANY EXCAVATION FOR VERIFICATION OF LOCATION"

NUMBER	REVISIONS	DATE	APPROVED BY

MARLER PARK BOAT RAMP PARKING AND OUTDOOR EXHIBIT AREA

WATER PLAN

ATKINS
2114 Airport Blvd., Suite 1450 Pensacola, Florida 32504
Phone No. 850.478.9844

ENGINEER OF RECORD
KEVIN M. MORGAN
LICENSE No. 73500
STATE OF FLORIDA
Kevin M. Morgan, P.E.
FL P.E. No. 73500

SCALE:	1 IN = 40 FT.
DRAWN BY:	K.M.M.
DESIGNED BY:	K.M.M.
CHECKED BY:	K.A.W.
APPROVED BY:	J.C.H.
PROJECT NUMBER	100024290
DRAWING NUMBER	W-100

22110 7/23/2012 7:44:12 PM T:\Emerald Coast Conference Center\100004695\roadway\Water Plan Sheet.DGN