T:\9000\9700-9799\9759 Sand Holdings\CAD\Terramodel\Engineering\9759 PHASE 1.pro

N

1/8/2018, 13:35:57

MICHAEL W. HARPER
LICENSE
NO. 37279
STATE OF
FLORIDA
PROFESSIONAL ENGINEER

BUCHANAN & HARPER, INC. ENGINEERING ~ PLANNING ~ SURVEYING ~ LANDSCAPE ARCHITECTURE 735 WEST 11TH STREET ~ PANAMA CITY, FLORIDA 32401 ~ COA NO. 2372		**VICINITY MAP** **FRONT BEACH ROAD** **INVESTMENTS, LLC**	
COUNTY: BAY COUNTY STATE: FLORIDA	DATUM: N/A JOB NO: 9759	HSCALE: 1"=550' VSCALE: NTS	DATE: 1/8/2018 EXHIBIT: 1 OF 8

DIGITALLY SEALED BY MICHAEL W. HARPER, PE ON 1/8/2018 USING SHA-1 AUTHENTICATION CODE. PRINTED COPIES ARE NOT CONSIDERED SEALED. SHA-1 CODE MUST BE VERIFIED ON DIGITAL COPIES.

T:\9000\9759\9759 Sand Holdings\CAD\Terramodel\Engineering\9759 PHASE 1.pro

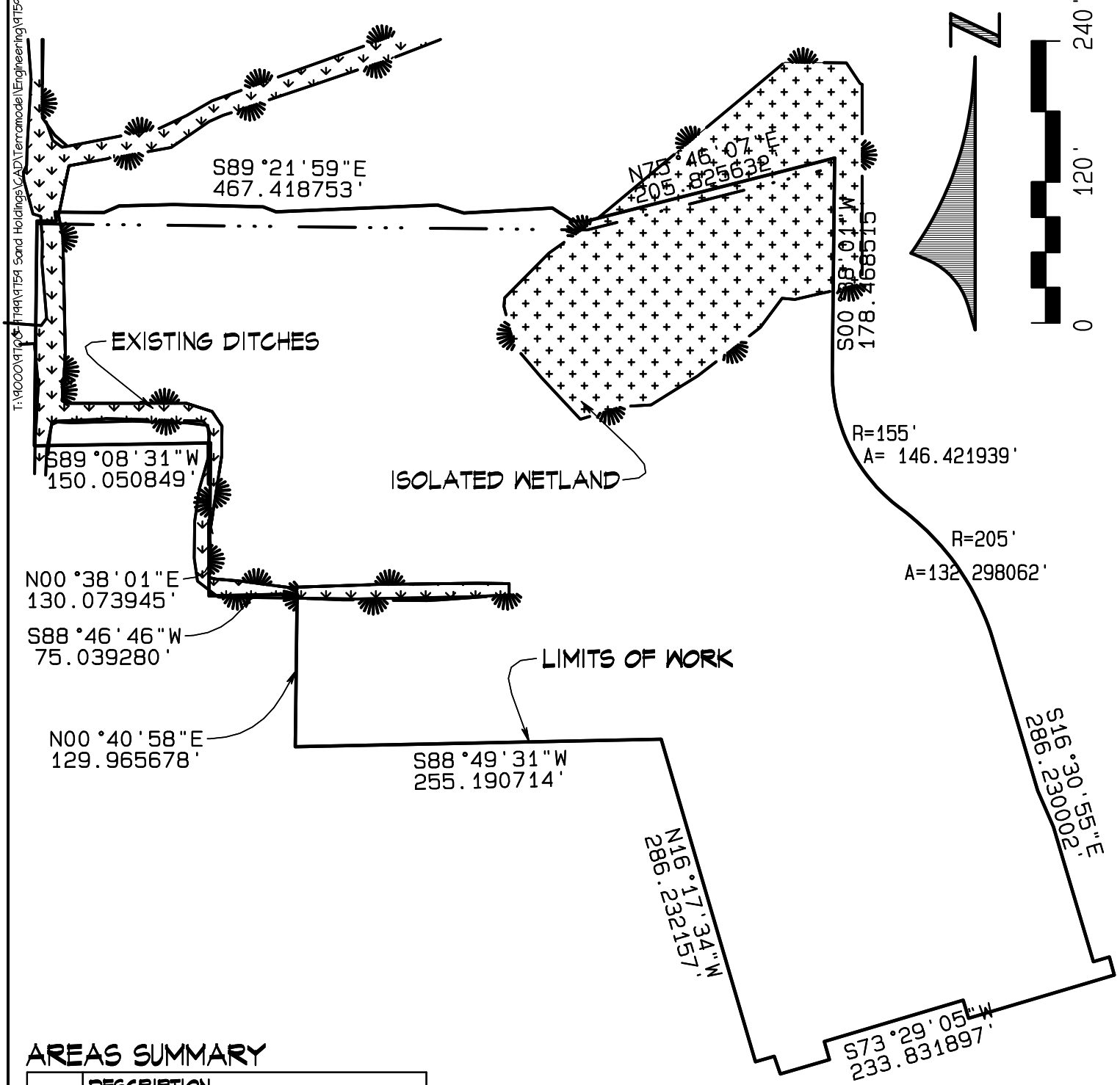

AREAS SUMMARY

	DESCRIPTION
	FBRI SITE (8.03 ACRES)
	WETLAND OUTLINE (1.07 ACRES)
	ISOLATED WETLAND (0.86 ACRES)
	EXISTING DITCHES (0.21 ACRES)

1/8/2018, 13:36:54

MICHAEL W. HARPER
LICENSE
NO. 37279
STATE OF
FLORIDA
PROFESSIONAL ENGINEER

BUCHANAN & HARPER, INC.
ENGINEERING ~ PLANNING ~ SURVEYING ~ LANDSCAPE ARCHITECTURE
735 WEST 11TH STREET ~ PANAMA CITY, FLORIDA 32401 ~ COA NO. 2372

EXISTING WETLANDS
FRONT BEACH ROAD
INVESTMENTS, LLC

COUNTY: BAY COUNTY	DATUM: N/A	HSCALE: 1"=120'	DATE: 1/8/2018
STATE: FLORIDA	JOB NO: 9759	VSCALE: NTS	EXHIBIT: 2 OF 8

DIGITALLY SEALED BY MICHAEL W. HARPER, PE ON 1/8/2018 USING SHA-1 AUTHENTICATION CODE. PRINTED COPIES ARE NOT CONSIDERED SEALED. SHA-1 CODE MUST BE VERIFIED ON DIGITAL COPIES.

IMPACT LEGEND

	DESCRIPTION
	WETLANDS (1.07 ACRES)
	FILLED AREA (0.91 ACRES)
	REGRADED AREA (0.16 ACRES)

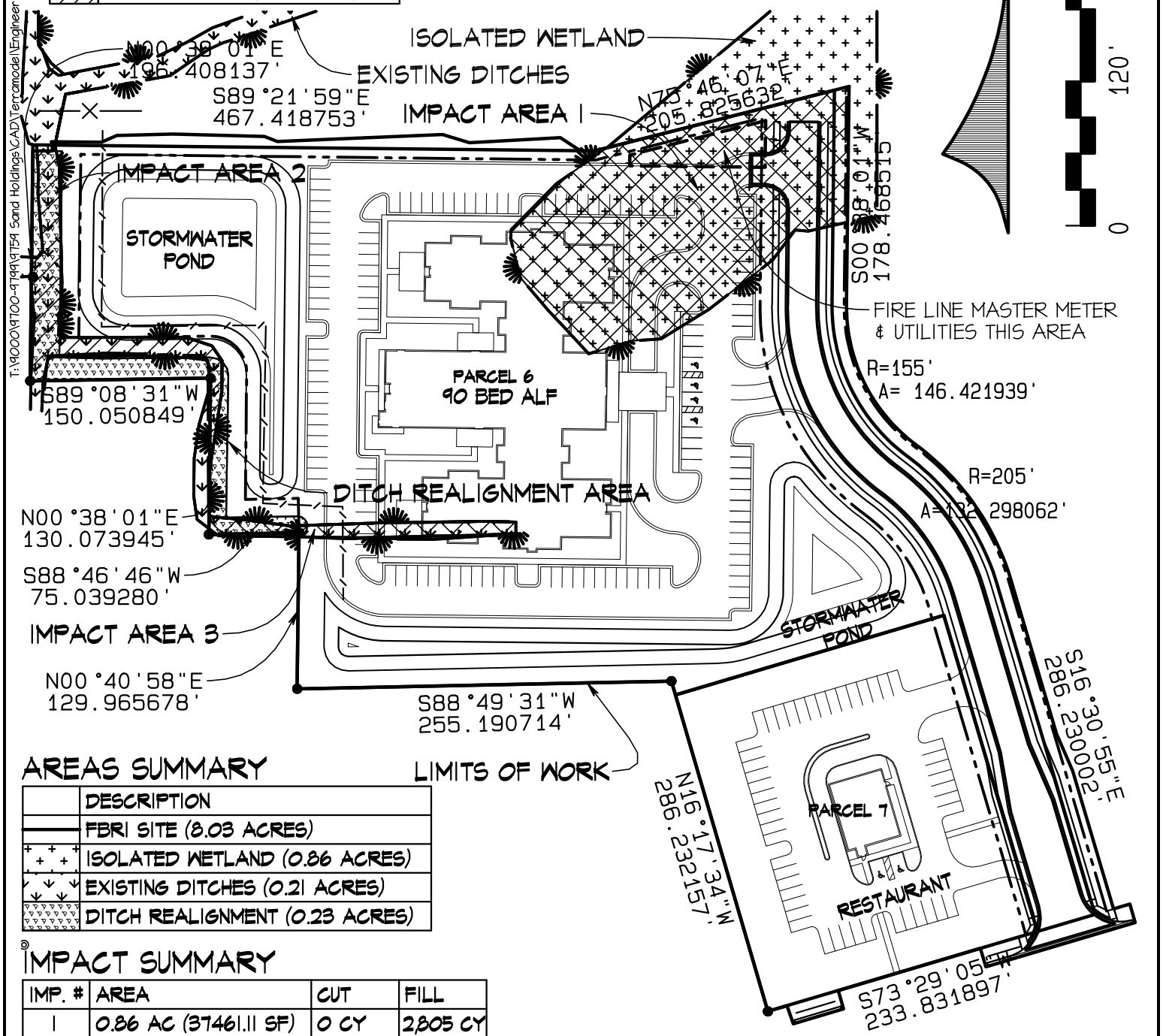

AREAS SUMMARY

	DESCRIPTION
	FBRI SITE (8.03 ACRES)
	ISOLATED WETLAND (0.86 ACRES)
	EXISTING DITCHES (0.21 ACRES)
	DITCH REALIGNMENT (0.23 ACRES)

IMPACT SUMMARY

IMP. #	AREA	CUT	FILL
1	0.86 AC (37461.11 SF)	0 CY	2,805 CY
2	0.16 AC (6822.86 SF)	51 CY	422 CY
3	0.05 AC (2239.98 SF)	0.3 CY	378 CY

LEGEND

-/—/—/—/- EROSION AND SEDIMENT CONTROL BARRIER

—X— FLOATING TURBIDITY BARRIER

MICHAEL W. HARPER
LICENSE
NO. 37279
STATE OF FLORIDA
PROFESSIONAL ENGINEER

BUCHANAN & HARPER, INC.
ENGINEERING ~ PLANNING ~ SURVEYING ~ LANDSCAPE ARCHITECTURE
735 WEST 11TH STREET ~ PANAMA CITY, FLORIDA 32401 ~ COA NO. 2372

PROPOSED CONDITIONS
FRONT BEACH ROAD INVESTMENTS, LLC

COUNTY: BAY COUNTY	DATUM: N/A	HSCALE: 1"=120	DATE: 1/8/2018
STATE: FLORIDA	JOB NO: 9759	VSCALE: NTS	EXHIBIT: 3 OF 8

DIGITALLY SEALED BY MICHAEL W. HARPER, PE ON 1/8/2018 USING SHA-1 AUTHENTICATION CODE. PRINTED COPIES ARE NOT CONSIDERED SEALED. SHA-1 CODE MUST BE VERIFIED ON DIGITAL COPIES.

T:\9000\9700-9799\9759 Sand Holdings\CAD\Terramodel\Engineering\9759 PHASE 1.pro

1/8/2018, 13:26:22

T:\9000\9700-9799\9759 Sand Holdings\CAD\Terrapro\Engineering\9759 PHASE 1.pro

IMPACT LEGEND

	DESCRIPTION
	WETLAND (1.07 ACRES)
	FILLED AREA (0.91 ACRES)
	REGRADED AREA (0.16 ACRES)

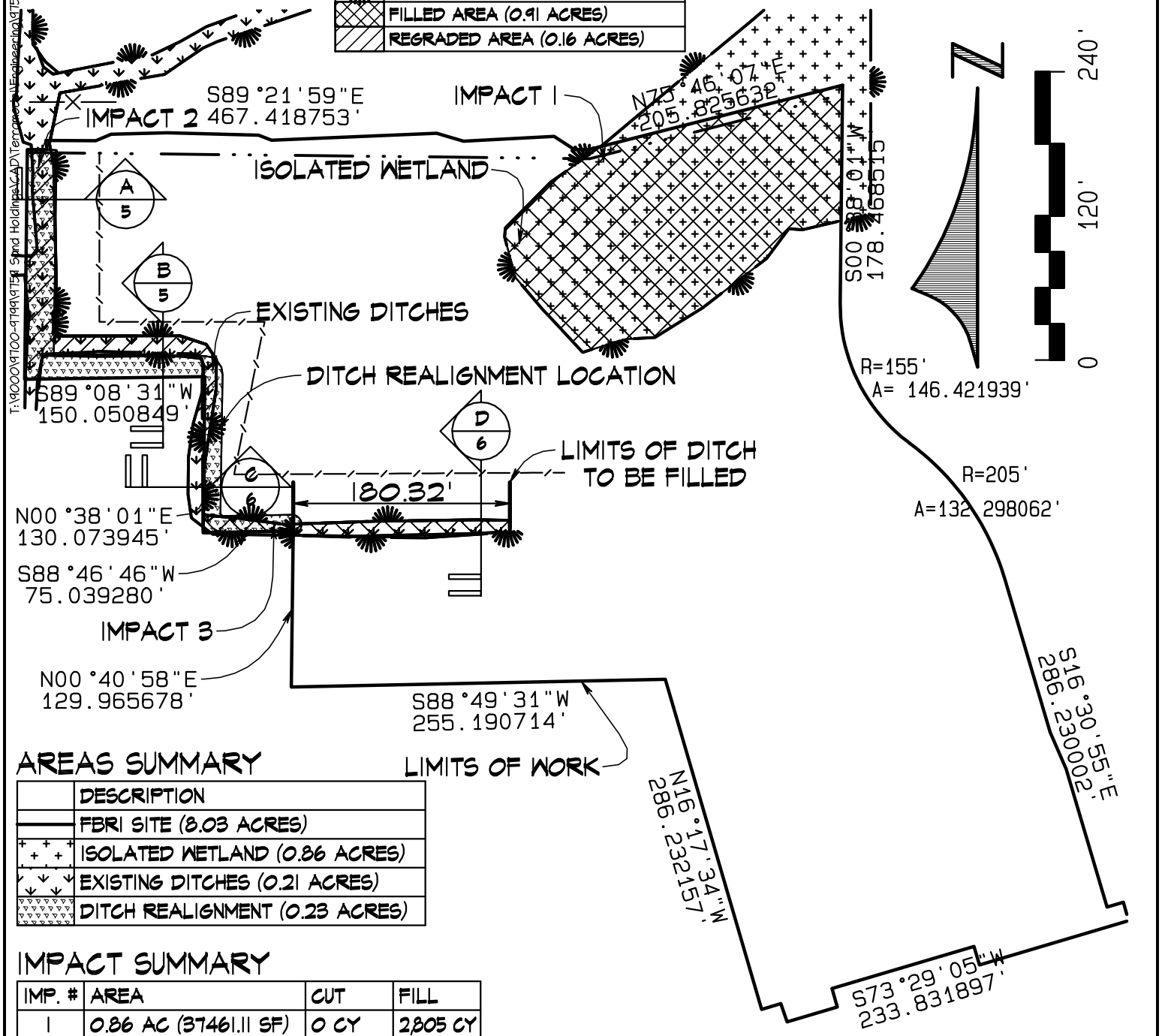

AREAS SUMMARY

	DESCRIPTION
	FBRI SITE (8.03 ACRES)
	ISOLATED WETLAND (0.86 ACRES)
	EXISTING DITCHES (0.21 ACRES)
	DITCH REALIGNMENT (0.23 ACRES)

IMPACT SUMMARY

IMP. #	AREA	CUT	FILL
1	0.86 AC (37461.11 SF)	0 CY	2,805 CY
2	0.16 AC (6822.86 SF)	51 CY	422 CY
3	0.05 AC (2239.98 SF)	0.3 CY	378 CY

LEGEND

—/—/—/—/— EROSION AND SEDIMENT CONTROL BARRIER

——X—— FLOATING TURBIDITY BARRIER

1/8/2018, 13:33:56

MICHAEL W. HARPER
LICENSE
NO. 37279
STATE OF
FLORIDA
PROFESSIONAL ENGINEER

BUCHANAN & HARPER, INC.
ENGINEERING ~ PLANNING ~ SURVEYING ~ LANDSCAPE ARCHITECTURE
735 WEST 11TH STREET ~ PANAMA CITY, FLORIDA 32401 ~ COA NO. 2372

PROPOSED IMPACTS
FRONT BEACH ROAD INVESTMENTS, LLC

COUNTY: BAY COUNTY	DATUM: N/A	HSCALE: 1"=120	DATE: 1/8/2018
STATE: FLORIDA	JOB NO: 9759	VSCALE: NTS	EXHIBIT: 4 OF 8

DIGITALLY SEALED BY MICHAEL W. HARPER, PE ON 1/8/2018 USING SHA-1 AUTHENTICATION CODE. PRINTED COPIES ARE NOT CONSIDERED SEALED. SHA-1 CODE MUST BE VERIFIED ON DIGITAL COPIES.

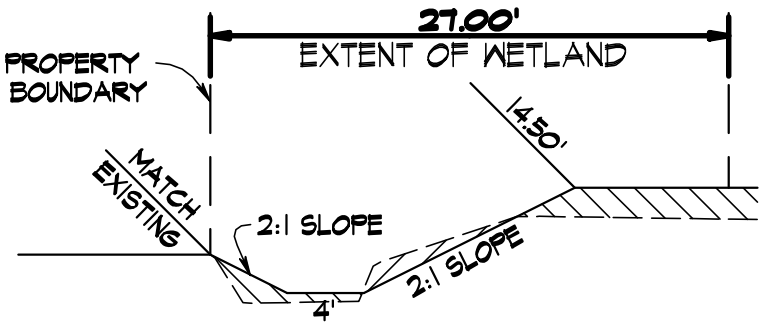

TYPICAL GRADING SECTION

NTS

A / 5

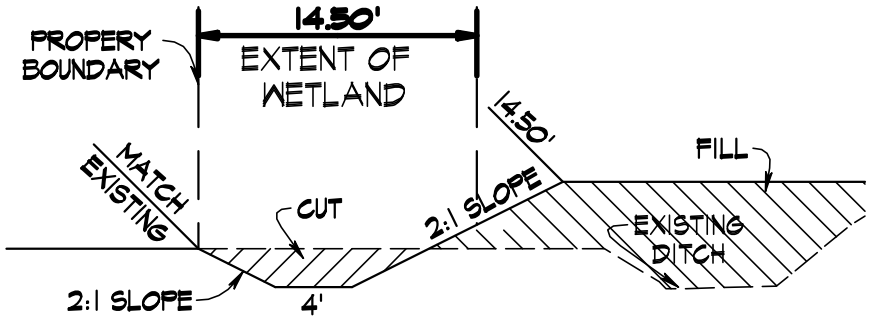

TYPICAL GRADING SECTION

NTS

B / 5

MICHAEL W. HARPER
LICENSE
NO. 37279
STATE OF FLORIDA
PROFESSIONAL ENGINEER

BUCHANAN & HARPER, INC. ENGINEERING ~ PLANNING ~ SURVEYING ~ LANDSCAPE ARCHITECTURE 735 WEST 11TH STREET ~ PANAMA CITY, FLORIDA 32401 ~ COA NO. 2372		**GRADING DETAILS** **FRONT BEACH ROAD INVESTMENTS, LLC**	
COUNTY: BAY COUNTY STATE: FLORIDA	DATUM: N/A JOB NO: 9759	HSCALE: 1"=10' VSCALE: 1"=10'	DATE: 1/8/2018 EXHIBIT: 5 OF 8

DIGITALLY SEALED BY MICHAEL W. HARPER, PE ON 1/8/2018 USING SHA-1 AUTHENTICATION CODE. PRINTED COPIES ARE NOT CONSIDERED SEALED. SHA-1 CODE MUST BE VERIFIED ON DIGITAL COPIES.

T:\9000\9700-9799\9759 Sand Holdings\CAD\Terramodel\Engineering\9759 PHASE 1.pro

1/8/2018, 13:34:44

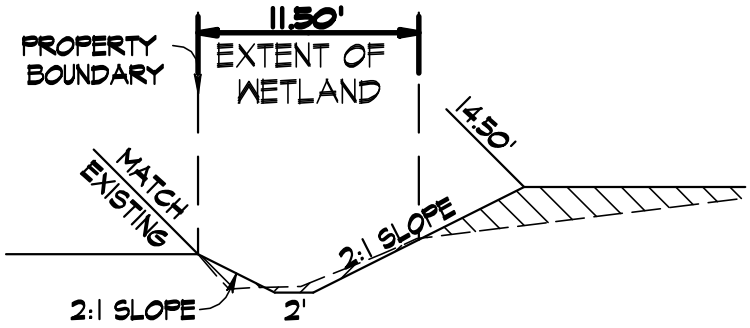

TYPICAL GRADING SECTION C/6

NTS

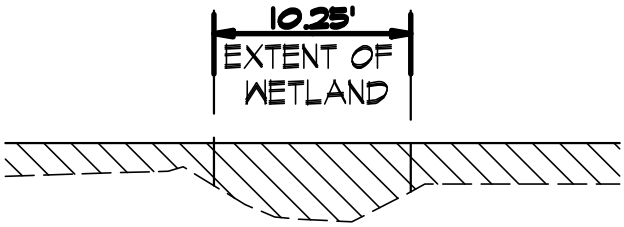

TYPICAL GRADING SECTION D/6

NTS

MICHAEL W. HARPER
LICENSE
NO. 37279
STATE OF FLORIDA
PROFESSIONAL ENGINEER

BUCHANAN & HARPER, INC. ENGINEERING ~ PLANNING ~ SURVEYING ~ LANDSCAPE ARCHITECTURE 735 WEST 11TH STREET ~ PANAMA CITY, FLORIDA 32401 ~ COA NO. 2372		**GRADING DETAILS** **FRONT BEACH ROAD** **INVESTMENTS, LLC**	
COUNTY: BAY STATE: FLORIDA	DATUM: N/A JOB NO: 9759	HSCALE: 1"=10' VSCALE: 1"=10'	DATE: 1/8/2018 EXHIBIT: 6 OF 8

DIGITALLY SEALED BY MICHAEL W. HARPER, PE ON 1/8/2018 USING SHA-1 AUTHENTICATION CODE. PRINTED COPIES ARE NOT CONSIDERED SEALED. SHA-1 CODE MUST BE VERIFIED ON DIGITAL COPIES.

T:\9000\9700-9799\9759 Sand Holdings\CAD\Terramodel\Engineering\9759 PHASE 1.pro

1/8/2018, 12:44:20

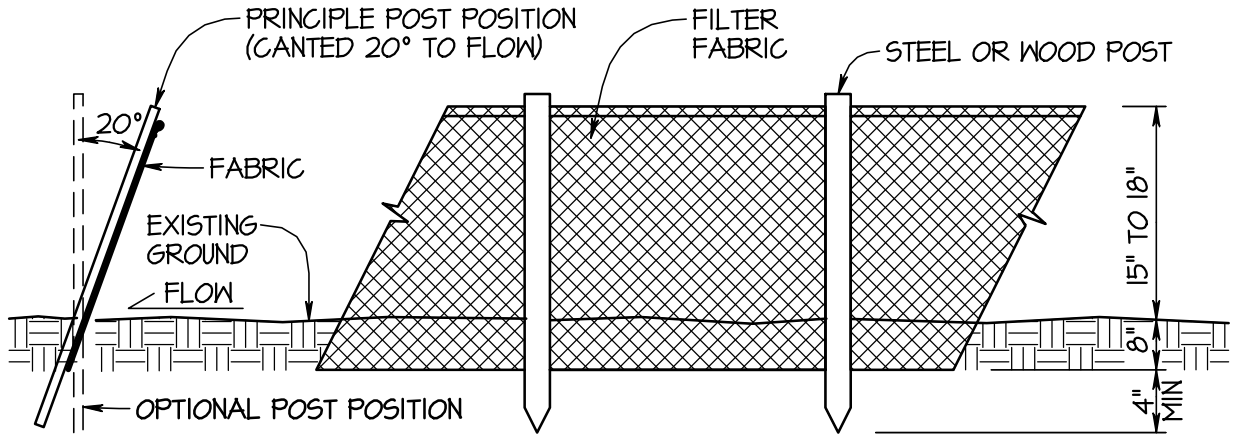

SECTION ELEVATION

NOTES:

1. SEDIMENT CONTROL BARRIER (SCB) TO BE USED TO PREVENT SEDIMENT TRANSPORT OR SILTATION OF STREAMS, DITCHES, ENVIRONMENTAL AREAS, STORM DRAINS, RETENTION/DETENTION AREAS AND OFF-SITE AREAS.
2. SCB TO BE TYPE III BARRIER PER FDOT STD INDEX 102 OR FLORIDA EROSION AND SEDIMENT CONTROL (FESC) MANUAL.
   A. FILTER FABRIC PER FDOT SPECIFICATION SECTION 985.
   B. POSTS TO BE 2-½"Φ OR 2"x4" SOFTWOOD, 1-½"Φ HARDWOOD, OR STEEL (1.33 #/FT).
   C. PREMADE SBC MAY BE USED WHEN PRODUCT MEETS REQUIREMENTS CONTAINED HEREIN.
3. ERECT SCB ALONG LIMITS OF WORK. USE DOUBLE FENCE AT REGULATED ENVIRONMENTAL AREAS (WETLANDS & WETLAND BUFFERS).
4. INSTALL PER THIS DETAIL, FDOT STD INDEX OR FESC MANUAL.
5. MAINTAIN SCB UNTIL COMPLETION OF CONSTRUCTION AND FINAL VEGETATIVE STABILIZATION. REMOVE SECTIONS AS REQUIRED TO FACILITATE CONSTRUCTION. REPLACE ASAP.
6. DESIGNATE A SPECIFIC CONSTRUCTION ACCESS POINT FOR A PERMANENT BREACH OF BARRIER. AT LOCATION OF ACCESS POINT, INSTALL GRAVEL AS REQUIRED TO PREVENT OFF-SITE SEDIMENT TRACKING. REFER TO NPDES STORM WATER POLLUTION PREVENTION PLAN FOR CONSTRUCTION ACTIVITIES FOR GRAVEL DRIVE DETAILS.

SEDIMENT CONTROL BARRIER

NTS

MICHAEL W. HARPER
LICENSE
NO. 37279
STATE OF
FLORIDA
PROFESSIONAL ENGINEER

BUCHANAN & HARPER, INC. ENGINEERING ~ PLANNING ~ SURVEYING ~ LANDSCAPE ARCHITECTURE 735 WEST 11TH STREET ~ PANAMA CITY, FLORIDA 32401 ~ COA NO. 2372	MASS GRADING DETAIL FRONT BEACH ROAD INVESTMENTS, LLC	DATUM: N/A JOB NO: 9759 HSCALE: NTS DATE: 1/8/2018	COUNTY: BAY STATE: FLORIDA VSCALE: NTS EXHIBIT: 7 OF 8

DIGITALLY SEALED BY MICHAEL W. HARPER, PE ON 1/8/2018 USING SHA-1 AUTHENTICATION CODE. PRINTED COPIES ARE NOT CONSIDERED SEALED. SHA-1 CODE MUST BE VERIFIED ON DIGITAL COPIES.

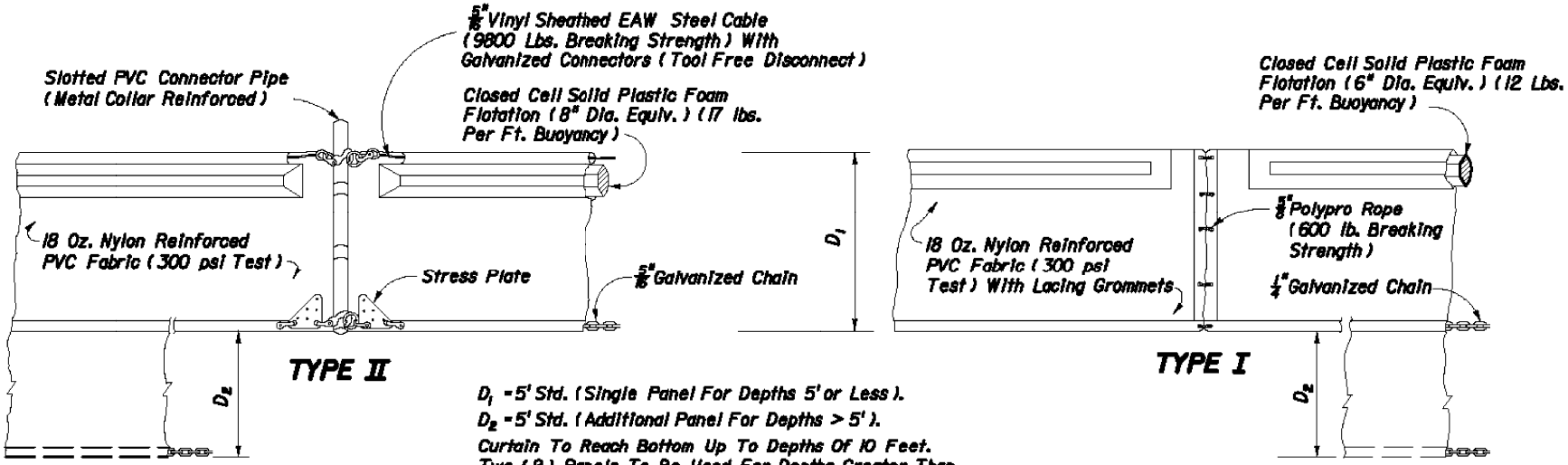

D_1 = 5' Std. (Single Panel For Depths 5' or Less).

D_2 = 5' Std. (Additional Panel For Depths > 5').

Curtain To Reach Bottom Up To Depths Of 10 Feet. Two (2) Panels To Be Used For Depths Greater Than 10 Feet Unless Special Depth Curtains Specifically Call For In The Plans Or As Determined By The Engineer.

NOTICE: COMPONENTS OF TYPES I AND II MAY BE SIMILAR OR IDENTICAL TO PROPRIETARY DESIGNS. ANY INFRINGEMENT ON THE PROPRIETARY RIGHTS OF THE DESIGNER SHALL BE THE SOLE RESPONSIBILITY OF THE USER. SUBSTITUTIONS FOR TYPES I AND II SHALL BE AS APPROVED BY THE ENGINEER.

FLOATING TURBIDITY BARRIERS

MICHAEL W. HARPER
LICENSE
NO. 37279
STATE OF FLORIDA
PROFESSIONAL ENGINEER

BUCHANAN & HARPER, INC. ENGINEERING ~ PLANNING ~ SURVEYING ~ LANDSCAPE ARCHITECTURE 735 WEST 11TH STREET ~ PANAMA CITY, FLORIDA 32401 ~ COA NO. 2372	TURBIDITY BARRIER DETAIL FRONT BEACH ROAD INVESTMENTS, LLC	DATUM: N/A JOB NO: 9759 HSCALE: NTS DATE: 1/8/2018 COUNTY: BAY STATE: FLORIDA VSCALE: NTS EXHIBIT: 8 OF 8

DIGITALLY SEALED BY MICHAEL W. HARPER, PE ON 1/8/2018 USING SHA-1 AUTHENTICATION CODE. PRINTED COPIES ARE NOT CONSIDERED SEALED. SHA-1 CODE MUST BE VERIFIED ON DIGITAL COPIES.