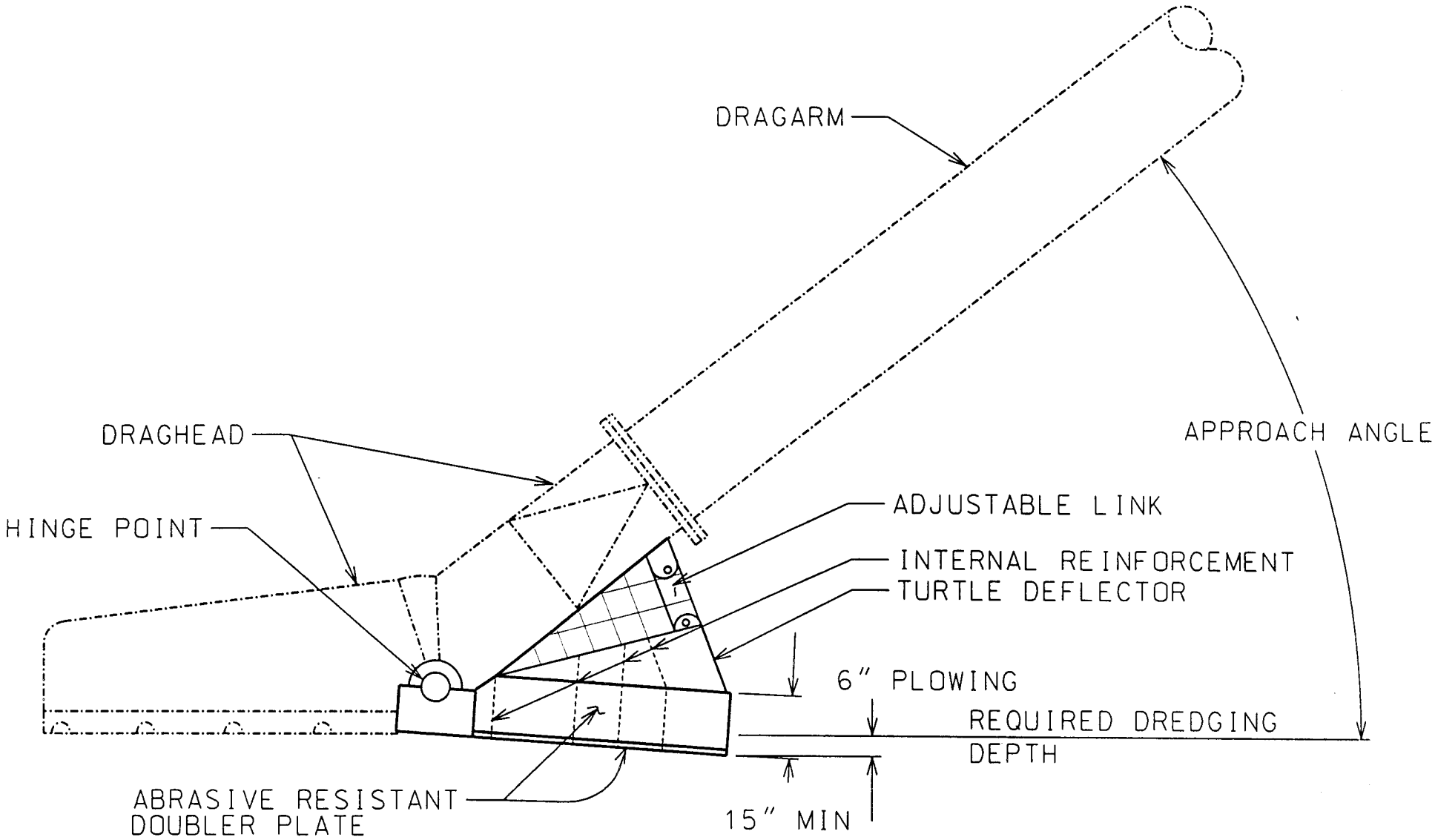

ELEVATION

RIGID ADJUSTABLE TURTLE DEFLECTOR
SCALE: NONE

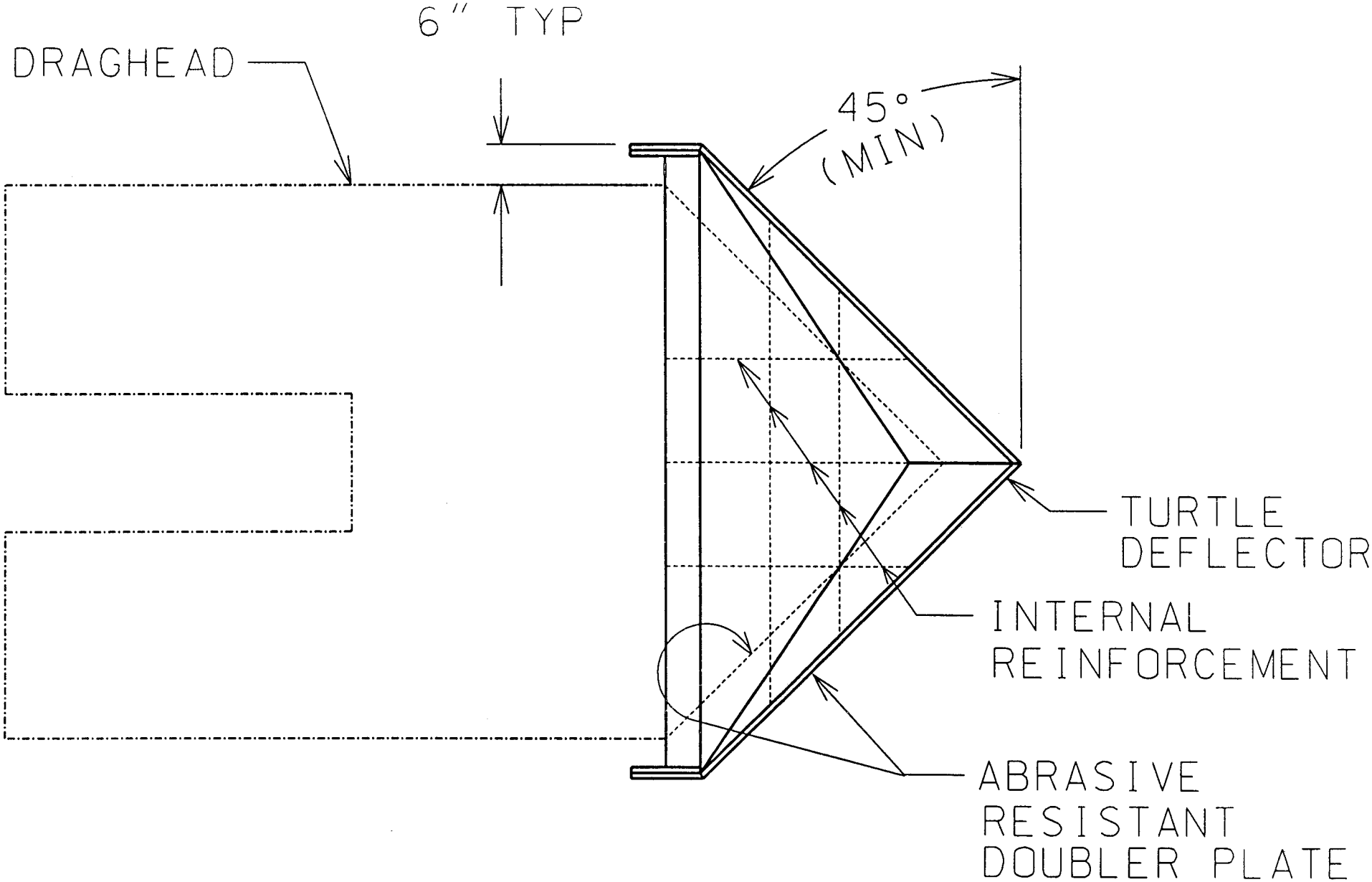

PLAN VIEW

RIGID TURTLE DEFLECTOR

SCALE: NONE